MOTM-510 The WaveWarper
Assembly Instructions & Owner's Manual

Synthesis Technology
6625 Quail Ridge Dr.
Fort Worth, TX 76180
(817) 498-3782
www.synthtech.com

June 9, 2006

MOTM-510 PARTS LIST

Please carefully check that all parts are in your kit. If you have a suspected shortage, please call or email. If you get free extra stuff, keep it for next time.

❒ **Capacitor** bag, containing the following 17 parts:

4ea 10mfd, 50V Electrolytic	C4, C8, C16, C17
4ea 10mfd, non-polar Electrolytic	C1, C3, C5, C13
2ea 1000pf (marked 1N) yellow box cap	C12, C15
7ea 0.1mfd (marked 104) ceramic axial	C2, C6, C7, C9-11, C14

❒ **Resistor** bag, containing the following 33 parts:

11ea 10K (brown, black, orange)	R4, R5, R7, R11, R12, R14, R18, R19, R21, R26, R27
7ea 68K (green, gray, orange)	R3, R6, R10, R13, R17, R20, R24
6ea 20K (red, black, orange)	R1, R2, R8, R9, R15, R16
2ea 12K (brown, red, orange)	R30, R31
2ea 1K (brown, black, red)	R25, R32
2ea 10 ohm (brown, black, black)	R33, R34
1ea 22 ohm (red, red, black)	R23
1ea 30K (orange, black, orange)	R28
1ea 39K (orange, white, orange)	R29

NOTE: R22 is not used.

❒ **IC & Semi** bag, containing the following 5 parts:

4ea TL072ACP dual opamp	U1, U2, U3, U5
1ea AD538 really expensive analog IC	U4
1ea 1N4148 diode	D1

❒ **Misc** #1 bag, containing the following 6 parts:

2ea Axial ferrite beads (plain, gray things)	L1, L2
1ea MTA-156 4-pin power connector	JP1
1ea MTA-100, 7-pin connector	JP2
1ea custom rotary switch assembly	plugs into JP2
1ea 18-pin screw machine IC socket	for U4

❒ **Knobs**, containing

7ea TYCO PKES90B1/4	for pots
1ea TYCO AMP2-1437624-0	for rotary switch

- ❒ **Jacks**, containing

  8ea Switchcraft 112A

- ❒ **Pots**, 7ea containing the following:

1ea 100 ohm Spectrol 148-71101	VR4
3ea 100K Spectrol 149-71104	VR1-3
3ea 100K Bourns conductive plastic	VR5-7

- ❒ **Front panel**

- ❒ **Mounting bracket**

- ❒ **Wire** bag, containing the following 12 wires:

  5ea RG-174 coax, 4 ½ inches
  2ea red/black 22ga. 3in.
  2ea orange/gray/white 22ga. 4 ½ in.
  1ea orange/white 22ga. 5in.
  1ea red/black/white 22ga. 7in.
  1ea Power Cable, 20”

- ❒ **Hardware** bag, containing:

  4ea #8-32 x 3/8 black screws (for mounting module to rack)
  4ea #6-32 x 1/2 zinc screws (for attaching pc board to bracket)
  4ea 1/4 inch aluminum spacers
  6ea #6 KEPS nuts
  7ea small tie-wraps

- ❒ **Organic Solder**
- ❒ **No-clean Solder**
- ❒ **PC Board**, MOTM-510

GENERAL INFORMATION

Thank you for purchasing the MOTM-510 WaveWarper. If you have any issues concerning the building or use of the kit, please contact us at (817) 498-3782 or by email: synth1@airmail.net.

This kit should take the average builder between 3 and 4 hours. The kit contains many different resistor values and special parts. However, please remember this is NOT a speed contest; it is an accuracy contest. There is no rule that you have to complete the entire kit in one day (as long as you wash the flux off!).

Successful kit building relies on having the proper tools. Here is a list of what you will need to build your MOTM-510:

- Soldering iron, 50W max power
- Needle-nose or chain-nose pliers
- Diagonal cutters
- Allen key set for securing the knobs (1/16" or 1.6mm)
- Magnifying glass: to read the capacitor codes and to inspect solder joints
- Lead bending tool (optional, but makes the job go much faster)
- (optional) oscilloscope (to check the output)
- #1 Philips screwdriver
- Fingernail brush for washing off the organic flux
- Old towel for blotting dry pc board

For more information of tools used and suggestions, see the MOTM FAQ and Catalog pages at http://www.synthtech.com.

There are no calibrations/trimmer to set for this module.

HOW TO FOLLOW THE DIRECTIONS

Please read the entire instruction before proceeding. There may be valuable information at the end of the instruction. Each instruction has a check box ❒ next to it. After you complete the instruction, check the box. This way you can keep track of where you are in the process.

VERIFY THE PARTS LIST

❒ Verify that all of the parts are in the kit as shown on the parts list.

A WORD ON SOLDERING

There are 2 very different types of solder used in the kit. Most of the soldering uses 'Organic Flux' solder. ***This is strictly for use on the pc board, and is NOT to be used on the front panel wiring!***

In order for solder to 'stick' to the copper, a chemical called 'flux' is embedded in the solder. The flux leaves a residue on the pc board that should be cleaned with warm water. DO NOT USE SOAP OR OTHER CLEANSERS. Most of the parts in the kits are 'waterproof' and can be

washed in the sink. The flux is OSHA approved for flushing down the drain, so don't worry about that! A soft brush is used to gently scrub the board. We recommend a 'fingernail brush', which is about 1" x 2" and can be found for about $1.

The other type of solder is called 'No Clean Flux'; because as the name implies it does not require washing. This solder is used for wiring the pots, switches, jacks, etc. This solder is harder to use on the pc board; because even when melted, it is not very fluid (about the consistency of toothpaste). We will use it VERY SPARINGLY on the pc board.

OK, let's get started on the board!

PART #1: SOLDERING THE RESISTORS

Since there are more resistors than anything else, we will start here. If you do not know the resistor color code, refer to the parts list. Resistors are not polarity sensitive, but the board will be easier to debug (and look nicer) if you point the first color band in the same direction for all the parts. The color code is also in the README FIRST document that every customer receives with his or her first order.

You will start by soldering in ALL of the resistors.

❒ Find the **RESISTOR** bag.

❒ Find the MOTM-510 blank pc board. There is a copy (larger than actual size) of the silkscreen which shows where the parts go at the end of this document. It will be useful if you locate the part on the print first, put the part in the board, then 'check off' the silkscreen. All parts are inserted from the side of the board with the white silkscreen (the "top" side).

❒ We will stuff the resistors by value to make things easier. The resistors are inserted on a 0.4 inch spacing. The important thing is to be sure that the part is sitting all the way down on the board. Push the leads in the holes, push the part on the board, and then bend the leads on the bottom outwards to a 45 degree angle (roughly!). This is called 'cinching the leads': and keeps the part from falling out! From the bottom of the board, solder (using the organic flux), applying heat to the pad for about a half second first, then applying just enough solder to make a small puddle that looks like a tiny pyramid. Enough solder should flow in the hole such that on the top (component) side, a small amount is on the top pad as well

The rule of soldering: don't use too much, you can always add more! Cut the leads flush with the top of the solder joint with your diagonal cutters.

NOTE: later in the assembly, you will need 3 scraps of resistor lead. Be sure to save some!

ANOTHER NOTE! The AD538 IC is VERY EXPENSIVE to replace ($55). There is a socket provided, but you MUST BE CAREFUL when inserting the IC into the socket later in the assembly. Be SURE you solder the socket in the correct orientation! YOU HAVE BEEN WARNED!

Locate the 10K 5% resistors (11pcs). Solder the resistors into R4, R5 and R7 (by U1), R11, R12 and R14 (by U2), R18, R19 and R21 (by U3) and R26 and R27 (left of U5).

- ❒ Locate the 68K resistors (7) and solder into R3 and R6 (by U1), R10 and R13 (by U2), R17 and R20 (by U3) and R24 (below C13).
- ❒ Locate the 20K resistors (6) and solder into R1 and R2 (by U1), R8 and R9 (by U2) and R15 and R16 (by U3).
- ❒ Locate the 12K resistors (2) and solder into R30 and R31 (left of C13).
- ❒ Locate the 1K resistors (2) and solder into R25 (right of J7) and R32 (left of VR4).
- ❒ Locate the 10 ohm resistors (2) and solder into R33 and R34 (right of VR7).
- ❒ Locate the 22 ohm resistor and solder into R23 (left of VR3).
- ❒ Locate the 30K resistor and solder into R28 (left of C16).
- ❒ Locate the 39K resistor and solder into R29 (below VR7).

NOTE: position R22, to the right of JP2, is NOT USED and should be left OPEN.

PART #2: BOARD WASH #1

- ❒ Verify all the resistors are in the correct position.
- ❒ Verify all the resistors are flat on the board. Correct if needed. Check solder joints.
- ❒ Wash the board in warm water, gently scrubbing *both* sides. DO NOT USE ANY SOAP! Just water! Blot dry with old towel and let it sit for at least 15 minutes.
- ❒ Take a little break! You are about 1/3rd of the way finished.

PART #3: CAPACITORS

- ❒ Locate the **CAPACITOR** bag. Note that the ceramic axial caps are bent on 0.300 centers. If you are using the Mouser red plastic bending guide, you will see there is no 'slot' for the 0.300 spacing. However, we can use a clever trick! You use the round hole at the small end. Lay the body of the cap across the hole, and bend the leads over the sides as before. A perfect 0.300 bend!

- ❒ Locate the 2 'yellow box' caps (1000pf, or 1nf) and solder into C12 and C15.

- ❒ Locate the 0.1mfd axial ceramic caps (7) and solder into C2, C6, C7, C9, C10, C11 and C14.

- ❒ Locate the 10µfd NON-POLAR electrolytics (4). Note that the caps are labeled NP and are missing a 'marking stripe'. Insert these into C1, C3, C5 and C13.

- ❒ Locate the 10µfd electrolytics (4) which are orange . Note that there is a stripe on the NEGATIVE terminal. The pc board has a + on the POSITIVE terminal. Carefully stick the capacitors into C4, C8, C16 and C17 with the stripe ***away*** from the + pad on the board. All 4 capacitors are facing the same direction (stripe 'up'), so be SURE they are all in the pc board the same way.

PART #4: MISC and IC STUFF

Almost done with the parts on the pc board! This will finish up the soldering with the organic flux.

- ❒ Locate the **MISC #1** bag and the **IC** bag.

- ❒ Locate the ferrite beads (2). They are axial parts, gray colored with no markings. These are non-polar, and are soldered into L1 and L2 (by JP1).

- ❒ Locate the MTA-156 4-pin power connector. Solder into JP1. Note that the connector has a 'locking tab' on one side. The silkscreen symbol for JP1 has a line on one side, indicating this is the side where the locking tab goes.

- ❒ Locate the MTA-100 7-pin rotary switch connector. Solder into JP2. Note that the connector has a 'locking tab' on one side. Note the silkscreen symbol for JP2 has a line on one side, indicating this is the side where the locking tab goes.

- ❒ Locate the 1N4148 diode. Solder into D1, with the black stripe on the diode facing 'up' (matching the while stripe on the silkscreen).

- ❒ Locate the TL072ACP op amps (4). Solder into U1, U2, U3 and U5. Note that all ICs are pointing "up" towards the top edge of the pc board. The IC will have a 'notch' or indentation in the top by Pin #1.

- ❒ Locate the 18-pin IC socket. It solders into the space for U4. See the interesting BE CAREFUL lettering on the pc board? It's there for a reason: you need to **be careful** in both soldering in the IC socket AND installing U4 (installing is later on). Look at the IC socket: notice one end has a 'notch' in the crossbar. This indicates "pointing up", meaning Pin #1 is the UPPER LEFT CORNER on the socket. If you look closely at the

pc board, Pin 1 is a SQUARE solder pad with the '1' printed above it. The IC outline on the bard also has a 'notch' pointing "up", which matches the 'notch' in the IC socket. So, solder the IC socket into U4 with the notch UP. The pins are small diameter, so you will have to hold the socket flat against the pc board while soldering the first 2 or 3 pins. ***DO NOT BEND ANY OF THE IC SOCKET PINS OVER ON THE PC BOARD!***

❒ Apply a small bit of solder to the via holes. These are the small pads that allow traces to "change sides" of the pc board. DO NOT SOLDER PADS FOR THE REMAINING COMPONENTS!! As an example, if you look at VR2, you will see traces, surrounded by copper, with 2 via holes above VR2 and another via hole to the left of VR2. A 'hidden' one (hard to see) is directly above the letter 'P' in the "MOTM-510 WAVEWARPER" lettering near the top edge of the pc board.

PART #5: FINAL BOARD WASH & INSPECTION

❒ Verify all the parts are in the correct locations. Make sure all of the ICs are pointing the same direction.

❒ Inspect the solder joints. Any solder shorts? Too much solder? Missing joints?

❒ Wash the board under warm water. Scrub gently. Allow to dry for at *least* 2 hours!

THIS IS A GOOD STOPPING PLACE TO REST OR PUT THE KIT AWAY UNTIL LATER.

You are now finished with the Organic flux solder. All soldering past this point is using the No-Clean solder. You do not have to wash the board anymore.

PART #6: FINISHING THE PCB

You will now solder in the remaining parts on the pcb in preparation for wiring to the front panel. USE THE NO-CLEAN SOLDER. BE CAREFUL!

❒ Locate the Spectrol pots. These have black bodies (the Bourns pots have blue bodies). Look carefully at the lettering: 3 pots will be marked 149-71104 and 1 pot will be marked 148-71101. **The '148' pot goes into VR4!** The 3 '149' pots go into VR1, VR2 and VR3. Insert the leads so that the pot sita all the way down, resting on the pc board with the shafts facing "outward". Solder and trim the leads.

❒ Locate the 5 pieces of RG-174 black coax cable. Again, note that one end has longer wires stripped than the other. The short ends will go in the pc board in locations J1, J3, J5, J7 and J8. Look at the pc board. Notice that in the coax positions, there is a large hole pad (lower pad) and a smaller pad (top hole). The braided wire is soldered into the larger hole. The smaller, inner conductor goes in the top hole. BE SURE THE ***SHORTER*** BRAIDED END GOES INTO THE PC BOARD.

Solder each coax cable into the holes. Attach a tie-wrap to secure the coax cable flush to the board. The tie-wrap goes down, into the left hole and up through the right hole. Secure and trim off any excess. See the photograph below for proper mounting (this is generic photo, not *specifically* using the MOTM-510 pc board).

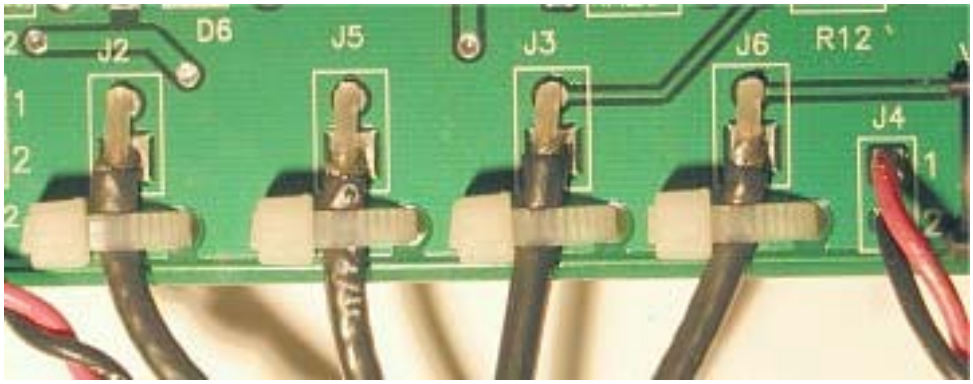

- ❒ Locate the 2 red/black twisted wires. These solder into J4 and J6. One end of the wires has more insulation stripped than the other. We call this the "long end". The "short end" is what solders into the pc board. Solder the red wire in the top (#1) hole and the black wire in the bottom (#2) hole.

- ❒ Locate the orange/white twisted wire. It solders into J2. Solder the white wire into the top hole (#1) and the orange wire into the bottom hole (#2).

- ❒ Locate the red/black/white twisted wire. It solders into VR5. The red wire goes into the top hole (#3), the black wire goes into the center hole (#2) and the white wire goes into the bottom (#1) hole.

- ❒ Locate the 2 orange/gray/white twisted wires. These solder into VR6 and VR7. Solder the orange wire into the top (#3) hole, the gray wire into the center (#2) hole and the white wire into the bottom (#1) hole.

- ❒ Locate the really pretty but painfully expensive IC U4, the AD538. After admiring the shiny gold top and handsome ceramic body, reflect for a moment that if you mess this next step up, it's going to cost you $55 :)

  Pin 1 of this IC has a small, white triangle by it. The 'point' of the triangle will be pointing to a thin 'strip' of metal. A free Dr. Pepper to the first person who guesses what this little strip is for. **The 'flat' side of the little triangle is PIN #1**.

  If you somehow forgot to install the IC socket, do so now, using no-clean solder. Soldering U4 into the pc board is, in technical terms, a 'bad idea'.

If you discover, with panic, that you soldered the socket in upside down, then ***DON'T try to unsolder it***. The IC will still go in fine. But no Dr. Pepper for you!
Now, using the utmost caution, **carefully insert U4 into the socket with Pin 1 across from C16,** where oddly enough I provided this rather large '1' symbol. If you see that Pin 1 is across from the 'JP2' lettering, this, in technical terms, is called "bass ackwards" or "upside down" or even "about to cost you $55". You can remove U4 with a small, flat-bladed screwdriver, prying up under the IC body. Pry the IC a little at a time, alternating end-to-end (else there is a great chance you will bend the pins).

GENTLY BUT FIRMLY press U4 down in the socket. The IC 'body' will NOT touch the top of the socket. This is because the pins are 'flared' at the top, where the pins extend out from the ceramic body. You may even hear a small 'click' as the IC seats in the socket.

YOU ARE NOW FINISHED WITH THE PC BOARD WORK! BREAK TIME.

PART #7: FRONT PANEL PREPARATION

You will now attach components to the front panel. It is HIGHLY recommended that you use a set of hollow shaft nut drivers, NOT PLIERS, to tighten the nuts. This prevents scratching. NOTE: all references to part orientation is from the REAR of the panel.

❒ Locate the 8 Switchcraft jacks. Notice that from the rear, there is a beveled corner. This corner is ALWAYS CONNECTED TO GROUND, WITH A BRAIDED CONDUCTOR. Each jack has a flat washer, a lockwasher, and a ½" hex nut. Remove the nuts and washers from each jack. Place aside. Keep the lockwasher on the jacks.

❒ Insert the 8 jacks/lockwashers, with the beveled corner in the ***upper right*** corner, into the 8 holes. Place the flat washer on the jack, then the hex nut. Hold the jack with one hand on the backside, keeping it 'square'. Tighten the hex nut with a nut driver. NOTE: when tight, not much of the exposed threads of the jack are exposed.

Remember those resistor lead scraps you have been saving? They solder on the OFFSET X, OFFSET Y and OFFSET Z jacks. Solder the scrap in between the TOP and the BEVELED lugs. Be sure to leave enough space on the beveled lug to attach the coax braid (just solder the TOP lug for now).

❒ Locate the 3 blue Bourns 100K pots. These are for the X IN, Y IN and Z IN panel holes. The pots have a lockwasher that is *behind* the panel, and a flat washer is on the front side of the panel. Secure the pots to the panel, with the 3 leads pointing "down", towards the jacks. A ½" nut driver is preferred to tighten the panel nut.

❒ Now comes a tricky part. The rotary switch assembly goes into the ROOT/UNITY/POWER hole, but it has to be tightened in a specific orientation. If you look at the rear of the switch, you will see tiny numbers under each lug. In between the '7' and the '8' lugs, you will see a black "support latch". This black piece, that is in between the '7' and '8' lugs, must be "straight up" (at the 12 o'clock position) which on

the other side of the panel is where the UNITY tick mark is. Looking from the rear (back) of the switch, there will be a red wire on the #7 lug and nothing on #8.

The switch has plastic threads, so be ***very careful*** when tightening the nut. You have to grasp the switch from the rear , making sure it does not rotate from the correct position.

You are now ready to attach the pc board to the bracket and then wire up to the panel.

PART #8: ATTACH PC BOARD TO BRACKET/PANEL

❒ In the **HARDWARE** bag, locate 4 #6-32 x 3/8 screws, 4 #6 KEPS nuts, and 4 spacers.

❒ Locate the mounting bracket. The pc board attaches to the bracket, with the 4 screws threading from the top of the board, through the spacers, through the bracket, and then out the bottom of the bracket. If the bracket has a protective plastic covering, remove it first. The #6 KEPS nuts attach on the **bottom** of the bracket.

Attach the pc board to the bracket. The flanges will point upwards when the pc board is sitting on the bracket. Note that the bracket holes for the pc board are actually oblong. This is to allow adjustment for the pc board to firmly press up against the back of the panel. As a start, set the 4 screws ALL THE WAY TO THE LEFT of the oblong holes. ***Loosely*** tighten the 4 KEPS nuts on the bottom.

❒ THIS IS A VERY IMPORTANT STEP, SO PAY ATTENTION AND READ ALL OF IT BEFORE PROCEEDING!

Note that each of the 4 pots on the pc board have 2 hex nuts and a flat washer. Remove the first hex nut and the washer. Set aside.

What you will do now is adjust the remaining hex nuts so that when the bracket is all the way down on the panel's threaded studs, all the pot hex nuts touch the rear of the panel.

Screw (by hand) each hex nut on the pots so that it is all the way on (touching the face of the pot). Now, pick up the pc board/bracket assembly and carefully slide it over the 2 threaded studs, making sure the pots are aligned in the holes. Use 2 #6 KEPS nuts and tighten the bracket to the panel.

❒ Loosen the 4 KEPS nuts on the bottom of the bracket. Slide the pcb ALL THE WAY TO THE RIGHT AS FAR AS IT WILL GO, so that the 4 pot nuts are all pressing against the panel. By hand, put hex nuts on the outside threads of VR1 and VR4 to keep the pc board in place. Now, tighten the 4 KEPS nuts on the bracket. The pcb and bracket should be secure, with no gaps visible between the panel and the pot nuts. You may need to loosen the nuts on the pots, so that they are touching the back of the panel. Again, make sure each pot's nut is touching the back of the panel (no gaps!). There may be a gap from the edge of the *pc board* to the panel.

PART #9: FINISH WIRING TO THE PANEL

Please read the following instructions carefully. In order to neatly attach the many wires to the front panel components, the wires are soldered in a specific order.

- ❒ Now you will solder to the 8 jacks. Each jack has 3 lugs from the rear we will refer to them as LEFT, TOP, and BEVELED. The TOP lug is for the switched contact: this is a NC (normally closed) contact that is opened when a plug is inserted. The resistor lead scraps placed between the TOP and the BEVELED lugs purposely shorts unused inputs to ground. This lowers the noise and the DC offset voltage.

- ❒ Solder the coax in J8 to the AUDIO OUT jack. The braid goes to the ***BEVELED*** lug. The inner conductor goes to the ***LEFT*** lug. This is true of ALL coax wires.

- ❒ Solder the coax in J7 to FULL OUT.

- ❒ Solder the coax in J5 to AUDIO Z.

- ❒ Solder the coax in J3 to AUDIO Y.

- ❒ Solder the coax in J1 to AUDIO X. This is somewhat of a stretch, but it will reach.

- ❒ Solder red/black wire in J6 to OFFSET Z. The red wire goes to the LEFT lug, and the black wire goes to the BEVELED lug.

- ❒ Solder red/black wire in J4 to the OFFSET Y jack.

- ❒ Solder the orange/white wire in J2 to the OFFSET X jack. The white wire goes on the LEFT lug and the orange wire goes on the BEVELED lug

- ❒ The red/black/white wires in VR5 solder to the Bourns pot X IN. The red wire solders to the LEFT pot lug (#3), the black wire solders to the center lug (#2) and the white wire solders to the right lug (#1).

- ❒ The orange/gray/white wires in VR6 solder to the Y IN Bourns pot. The orange wire solders to the left lug, the gray wire solders to the center lug and the white wire solder to the right lug.

- ❒ The orange/gray/white wires in VR7 solder to the Z IN Bourns pot. The orange wire solders to the left lug, the gray wire solders to the center lug and the white wire solder to the right lug.

❒ The rotary switch white 7-pin connector goes on JP2. If you look at the wires on the connector, the 2 'outside' wires are red and black. Now look at the pc board: the male JP2 connector should have the 'locking tab' next to the empty R22 position. Place the rotary switch female connector carefully on JP2, ***so that the RED WIRE IS ON THE TOP (NEXT TO VR3) AND THE BLACK WIRE IS ON THE BOTTOM, BY THE JP2 LETTERING.*** This will cause the wires to go over the top of U4, away from the front panel.

BE SURE THAT THE CONNECTOR IS NOT 'OFFSET' ON JP2, THAT THE END PINS ARE BOTH INSERTED.

❒ Rotate all of the front panel pots fully counter-clockwise. Locate the **KNOBS**. There are 7 "regular" knobs and 1 special 'pointer' knob. The pointer knob is for the rotary switch. This knob goes on first, and it is somewhat tricky to align correctly.

The best way is to loosen the **2** hex screws (I have no idea why there are 2 of them), manually rotate the switch clock-wise until it stops at the POWER position, and attach the knob. It may take several tries to get the 2 set screws to "balance" the torque on the knob so that the white line aligns with the 3 tick marks. Well, it's tough for *me*, at least :(

The other 7 knobs go on the 7 pots. Place the knob on the pot shaft, align the white line to the '0' tick mark, and tighten the hex screw. The silver part of the knob has a protective clear plastic overlay that can be removed if desired. Gently rub with your fingernail across it and it will peel off.

Use the 2 remaining tywraps to bundle the wires to the Bourns pots and most of the wires to the jacks. Trim off the excess.

****

CONGRATULATIONS! YOU HAVE FINISHED BUILDING THE MOTM-510!

****

All that's left to do is test it! But before we do, please read the following Theory of Operation. A 'hands-on' tutorial follows, with several audio demos you can listen to at:

www.synthtech.com/demo/warper

IMPORTANT NOTE:

The ROOT/UNITY/POWER switch is physically disconnecting active signals while the module is under power. Therefore, the module may output 'pops', 'crackles' and 'thumps' when switching position. Also, it is possible to apply enough pressure on the knob without turning it to another position, but will cause this noisy output (the contacts of the switch "bounce" and this causes noise).

The switch assembly is ***NOT BAD, nor is the module "bad".***

THEORY OF OPERATION/TUTORIAL

The MOTM-510 is a small, 'pre-programmed' analog computer. It is set to perform 1 basic mathematical calculation, whose end result is a 'warping' or distortion of the input(s). The analog computer is the Analog Devices AD538 IC chip (the gold-plated one), which has internally many op amps and laser-trimmed resistors set up for the specific calculation.

And what **is** that calculation, you ask?

To start with, the AD538 is a combination of multipliers and *log amps*. What's a log amp? Good question: it's a specially designed amplifier whose output is not linear, but goes as the logarithm of the input. Wait, you groan, as sweat begins to form on your brow….what's a *logarithm*? OK, here's the quick overview.

A while back, extremely smart people decided that it was easier to add numbers than multiply them, especially since there were no calculators or slide rules. So, they figured out that if there could be some way of "cheating", using say pre-printed tables, so that if you wanted to multiply X times Y, instead you could add 2 values *based* on X and Y and still get the right answer, that would be KEWL! So, these tables were calculated and were called logarithms.

Here's an example: 2 x 3 = ?

What you do is find, in the table (let's not go into how we **got** the table, OK?), the logarithms (in this case, these are called the natural logarithms and are abbreviated ln(x), like ln(2). You may have seen log(x), which are DIFFERENT logarithms and that's for another day).

So, we find: ln(2) = .6931 and ln(3) = 1.0986. Adding these together, we get 1.7917…Errr…now what? Well, we perform the *inverse logarithm*, meaning we look in the table for the 'answer' of 1.7917 and see what number has **this** for it's logarithm (the choice of the term 'inverse' is sometimes called 'anti-log' so that you don't get confused with the 'inverse of a number' which is 1 divided by that number). Scanning the table, we see that there IS in fact an entry for this number (1.7917) and by some miracle, that number is 6! So, 2 x 3 = 6. The way inverse logarithm is written is like this: $\ln^{-1}$.

Now, I'm sure by this point many of you are questioning my sanity why this is even relevant to the '510. The point is: if you want to make an analog multiplier function, then what you can possibly do is:

a) somehow take the logarithm of the inputs (not obvious)
b) add them together (EASY!!)
c) somehow perform the anti-log and BINGO! (still not obvious)

The solution: the circuitry inside the AD538 does this for us (if you **really** want to understand exactly how circuits can perform log/antilog functions, get a copy of the Non-Linear Handbook from Analog Devices (1-800-262-5643, select option 3). In a manner of speaking, the AD538 IC calculates, in real time, both log and anti-log functions of input signals. The data sheet for the AD538 also has more theory, and is contained as a PDF file on the CD-ROM (and also on the Analog Devices website).

If all the AD538 did was to act as a multiplier, that would be fine but not that exciting (there are many other analog multiplier ICs out there that don't cost $55). We already use multipliers in our synths: these are called 'Ring Modulators" and "VCAs". So what's the big deal with the AD538 and the WaveWarper?

Well, 2 things. First, the AD538 can also **divide.** Hmmm…haven't seen *that* before in a synth module! The AD538 does this by another 'trick' using logarithms:

$$\ln(X/Y) = \ln(X)-\ln(Y)$$

Meaning, that if we **subtract the logarithms** instead of *adding* them, we divide! Awesome, dude! (and people think math is boring). In analog circuits, this is trivial (simple op amp inverting summer). All of a sudden, the AD538 is looking quite interesting.

But there is one more surprise, and it's a biggie: using logarithms, it's also easy to calculate *roots and powers* of numbers, too!

This is calculated by using the well-know relationship:

$$\ln(X^y) = y * \ln(X)$$

For example, to calculate 4^3:

$\ln(4) = 1.38629$

$\ln(4) * (3) = 4.15888$

$\ln^{-1}(4.15888) = 64$ <<<taa daa!!!

Of course, step #2 above (the multiply) is done inside the AD538 by adding logarithms (as before). Personally, I think this is pretty COOL STUFF, being able to multiply, divide AND raise to powers using only adding circuits. And even cooler, we are able to this is real time, using voltages as the 'numbers' in our little analog computer.

What's the difference between a *root* and a *power*?

In this context, they are the same, but the implication is that a root is <1 (the other use of the math term 'root' means the number that makes an equation equal to zero).

So, a 'square root', which is usually written like this: $\sqrt{x}$

Can also be written as: $x^{.5}$

The downside of the AD538 (well, a downside for use MOTM users) is that the exponential factor is NOT a control voltage. Rather, it is designed to be an external trim pot. This is because the 'normal' usage of an AD538 is to generate a specific equation that is application-dependent. In these circuits, the exponent is a constant that is trimmed. However, the MOTM-510 'abuses' the AD538: we replace the fixed trim pot with a rotary switch and a front panel control, so that you can tweak the exponent in real-time.

So, what was the original application(s) of the AD538 (before we started abusing it with audio)? One widely used application was electric thermometers.

Many of you have heard the term *thermocouple*. A thermocouple is a temperature probe (there is one in your oven) made by twisting 2 different metal wires together. This makes a small (very small!) battery whose voltage output is based on the temperature of the 'junction' of the 2 metal wires. Also, you can take certain alloys of metal (usually platinum) that change resistance to temperature, according to something called the Stainhart-Hart equation:

$$1/T = a + b + (\ln R) + c(\ln R)3$$

where a, b, and c are 'fudge-factors' based on the wire used, R is the resistance and T is the temperature. Note that this "nasty" equation can be 'solved' with the AD538 (the 'ln(R) part and the $c(\ln(R)^3)$ part as well). Why is THIS a big deal? Because….this chip was designed in the pre-microprocessor, pre-ADC world, and the temperature readout was a linear analog meter. Since the meter has a linear scale, we want a linear relationship between temperature (what we are measuring) and voltage driving the meter (how we are displaying the temperature). Think about it for a minute: if I came to you and said: "I need a circuit that uses this equation to drive a meter over a 0 to +5V scale so that 1V = 100F, 2V = 200F, etc" how would you do it? Answer: AD538! The details are left to the user, but this part was widely used for this application. The other application was to "warp" the voltage in radar CRT terminals so that specific shapes (square, triangles, etc) 'drawn' on FAA radar screens (which are NOT flat CRTs,

but are 'bowls') are correctly seen. Hint: to 'linearize' a function like X^Y, you run it through the *inverse function* $X^{(1/Y)}$.

AUDIO OUT/FULL OUT (PLEASE READ!)

There are 2 outputs on the MOTM-510, labeled AUDIO OUT and FULL OUT. What's the difference, and how do you know which one to use?

The difference is the AUDIO OUT has an AC coupled, 16Khz 2-pole lowpass filter. The FULL OUT has no filter, and is DC coupled. So??!?

The FULL OUT should ONLY be used for DC control voltages or LFO outputs.

WARNING! IF YOU USE THE FULL OUT AND CONNECT IT TO AMPLIFIERS/ MIXERS/DIGITAL RECORDERS/AUDIO CARDS/WHATEVER, YOU CAN EASILY DESTROY/BLOW UP/EXPLODE/FRY/FUBAR/INSERT BAD THING HERE TO YOUR EQUIPMENT. YOU HAVE BEEN WARNED!

The AD538 IC can easily generate large signals with large DC offsets. Also, the wide bandwidth of the AD538 can generate harmonics up to 400Khz. Yep, I said 400KHz.

So, it's pretty simple: use AUDIO OUT unless you are warping LFOs (loads of fun!). Then, you NEED to use the FULL OUT.

TUTORIAL SECTION

A Ring Modulator is a multiplier: the output can be written as:

Out = X * Y

where X and Y are the 2 input signals (sometimes referred to as the modulator and the carrier). X and/or Y can be audio or DC signals. The output is simply the voltage X times the voltage Y. This produces the sum of X and Y (X+Y) and the difference of X and Y (X-Y)…Instead of the 2 RM inputs, the basic WaveWarper has 3: X, Y and Z. These are audio inputs. The transfer function is

Out = X * (Y/Z)^m

OK, so let's plug in some numbers to the MOTM-510 transfer function. If we assume **Z** and **m** are both one then we get

OUT = X * (Y/1)^1

which simplifies to

OUT = X * Y

which the minimally astute reader will recognize as the transfer function for a classic ring modulator. So if we are understanding things correctly, the following patch should give us some traditional-sounding RM:

VCO 1 SIN OUT -> 510 AUDIO Y (Y IN = 10, Y WARP = 10)

VCO 2 SIN OUT -> 510 AUDIO X (X IN = 10, X WARP = 10)

510 AUDIO OUT -> amplifier[1], power switch = UNITY

Drive the VCO's however you like, I use the MOTM-101 Sample & Hold module; detuning the VCO's shows off the nice RM effect of the patch.

[1] I take the 510 AUDIO OUT to the MOTM-109 IN and the OUT of the 190 to my mixing desk. This allows me to attenuate the output going to the desk. The signal in this patch is TOO HOT for my mixer's inputs, and is probably too hot for yours, too. Be careful! Also note that the FULL OUT can output up to 400 KHz; at high energy levels, you're bound to break something.

Now try turning down the X WARP knob. At zero, the timbre is quite a bit fuzzier than at 10. Try the same with the Y WARP knob: same deal, but the Y fuzziness has a different character It would be cool to automatically modulate the 'fuzziness' in and out, me thinks. No problem, that's what the OFFSET jacks are for!

In this patch, I use an LFO to sync the S&H speed with the OFFSETs on the '510 .Here is a diagram of the patch:

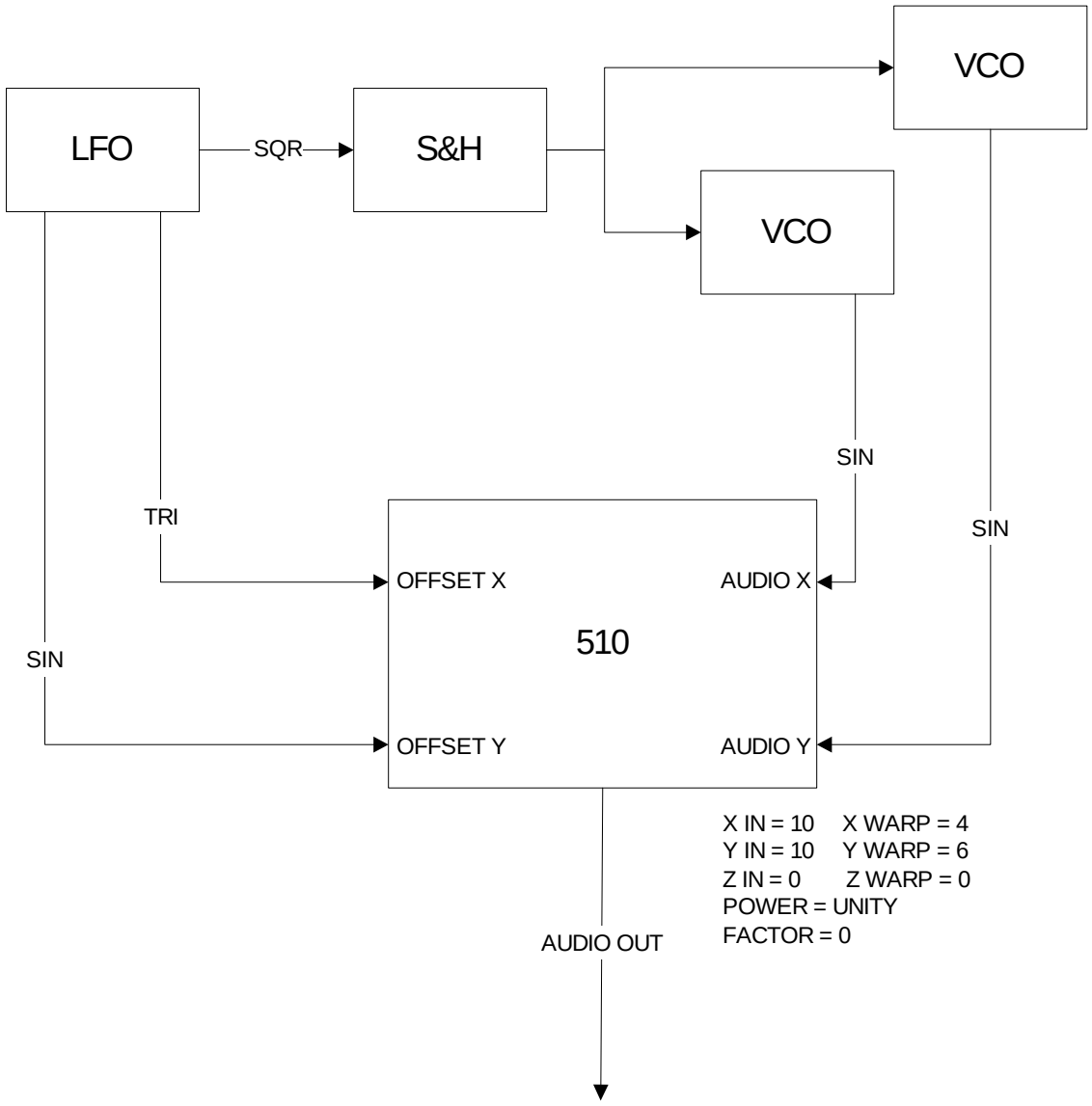

Figure 1: Patch Chart for DEMO #3

Now we're hearing something pretty interesting with just two sine waves! Play with the X IN, Y IN, and X and Y WARP knobs and see what it does to the timbre. When you're done, set them back as in the patch diagram (that way the next demo will sound close to what you'll hear on your system). Now crank the Z WARP knob to 10. Crazy! But what's going on?

Pretty simple, really. Refer back to equation (1); by altering Z WARP we are changing the value of Z in the equation (1). This, of course, alters Out and munges the wave form.

OK, one last demo before moving on to other aspects. This one uses the same patch diagram as for DEMO #3 except we'll add another sine wave from a third oscillator to AUDIO Z and tweeze the knobs a bit. I call this piece "Concerto for Farty Armpit Noises" which is probably not PC. Oh well.

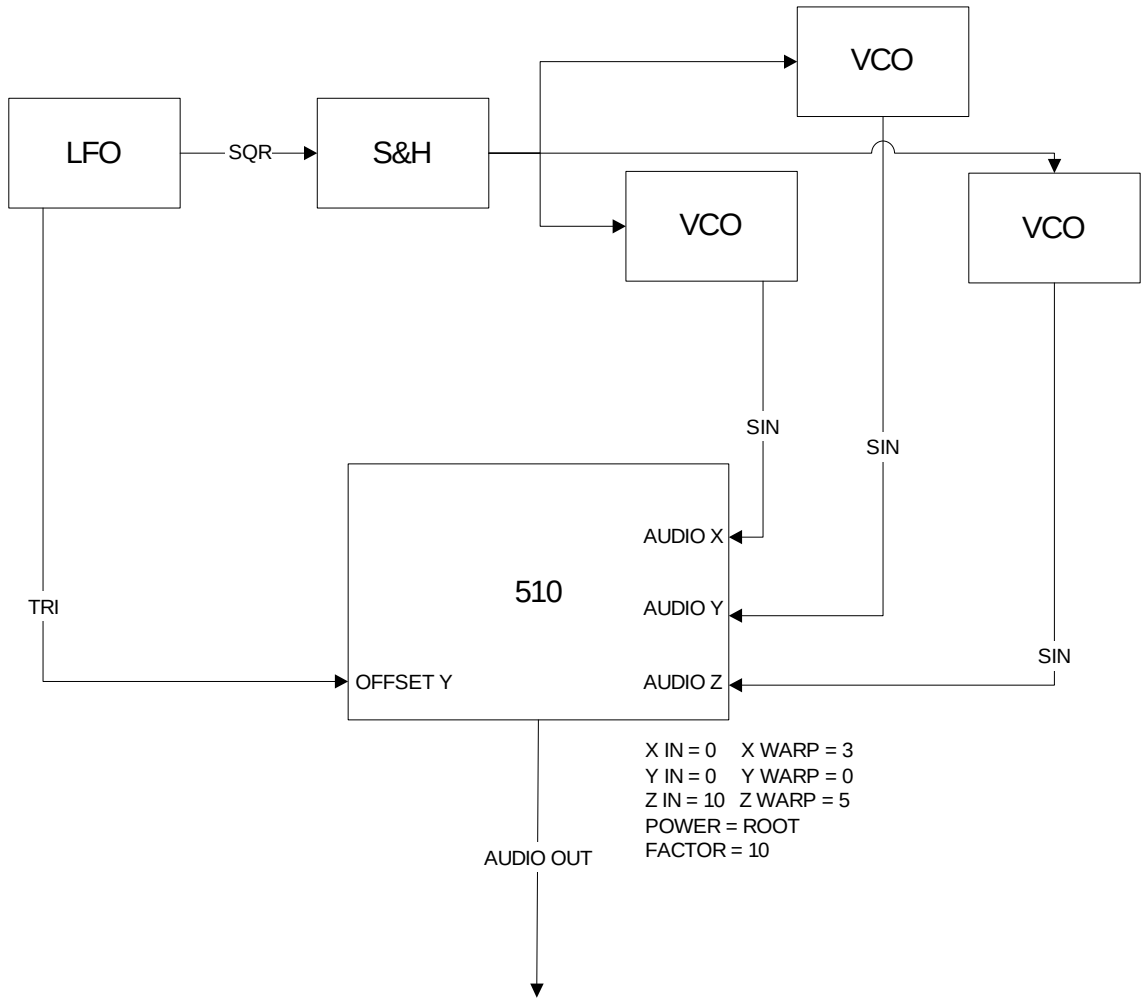

Figure 2: Patch Diagram for Demo #5

And finally, here is an extended improvisation using the patch diagrammed in Figure 2. The only alteration was the addition of an LFO feeding the S&H IN of the MOTM-101 to get a more regular pattern to play with. All the timbre variations you hear are accomplished by turning knobs and changing the ROOT/UNITY/POWER switch. This is an amazing amount of variation coming out of one module! No filters were used and no envelopes:

Exercises for Section 1.

1) Try patching other waveforms from the oscillators into the AUDIO ins of the 510.
2) Try using CVs instead of audio signals. You can 'warp' LFO triangle wave to all sorts of bizarre shapes. Use the FULL OUT if you want to uinclude all of the DC offsets as well.
3) Try using audio rate waveforms in the OFFSET jacks.
4) Do something that I didn't think of yet, make an MP3 of it and post it to the newsgroup.

Section 2 – Mangling Other Sources

One way of thinking about the 510 is that it is a distortion device. Don't believe me? Try it!

How'd I do that?

With this patch:

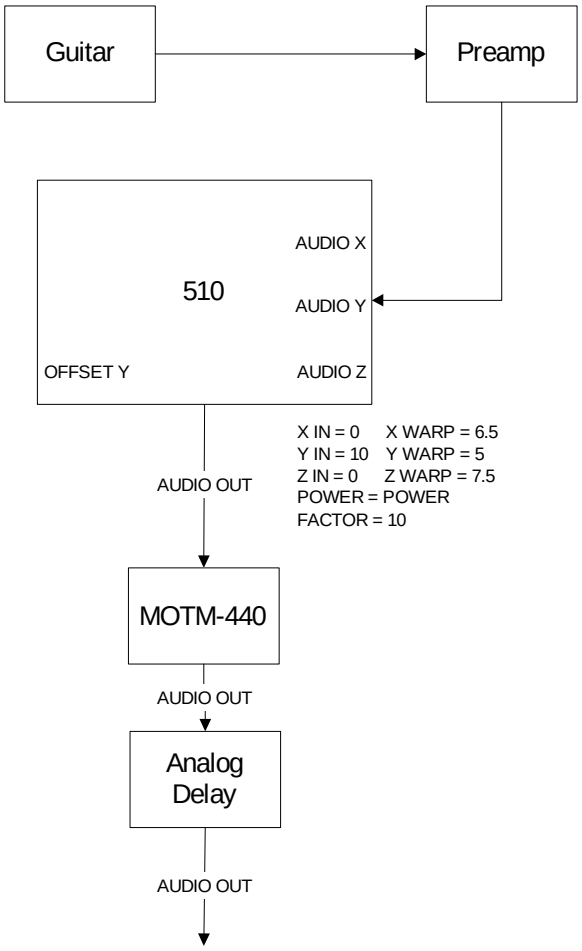

Figure 2: Patch Diagram for DEMO #6

The MOTM-440 allowed me to dial in the tone I wanted and the analog delay gave it some space. But the distortion and 'size' of the sound all came from the MOTM-510. Note that you have to fiddle a little bit with the WARP knobs to get just the right quality of distortion. Your mileage may indeed vary.

You can really get some interesting tones by varying the resonance and frequency parameters of the filter. Using another filter will give another quality to the tone, too. Here is another demo using the same patch as inFig. 2, but adding a little FM to the 440. Finally, you can destroy just about any innocent waveform. I really love sampled Pan Flutes, don't you? Here's the final sample: As you can hear, nothing escapes the 510's power to mangle!

TROUBLESHOOTING

If your MOTM-510 does not work, please verify ALL of the following before contacting us. The following reference directions assume that you are looking at the pc board with the panel to the right and the power connector to the left.

- ❒ All of the ICs are pointing the same way and all notches are 'down'.
- ❒ The braided wire on the coax goes to the beveled side of the jacks. Check all of the pots and switch wiring.
- ❒ The parts are in the right places, you didn't swap the 1K 1% with a 100K 1%.
- ❒ No solder shorts or missing joints.
- ❒ Again: when the rotary switch is turned or even *slightly* turned, the module with output spikes ('pops') or crackling. This is ***normal*** operation.

SPECIFICATIONS
MOTM-510 WaveWarper

Input signal level (any input)	-6V to +6V
Output level	20V peak-peak before clipping
Output distortion	Quite a bit, actually
Output SNR	Hard to tell

CONTROLS

IN1-IN2	Attenuator for the sum of IN1 + IN2
IN3-IN4	Attenuator for the sum of IN3 + IN4
IN5	Attenuator for IN5

GENERAL

Power Supply	-15VDC @ 23 ma nominal +15VDC @ 23 ma nominal
Size	2U x 5U 3.72” x 8.72” 88.2mm x 221.5mm
Depth behind panel	4.375 inches (111mm)

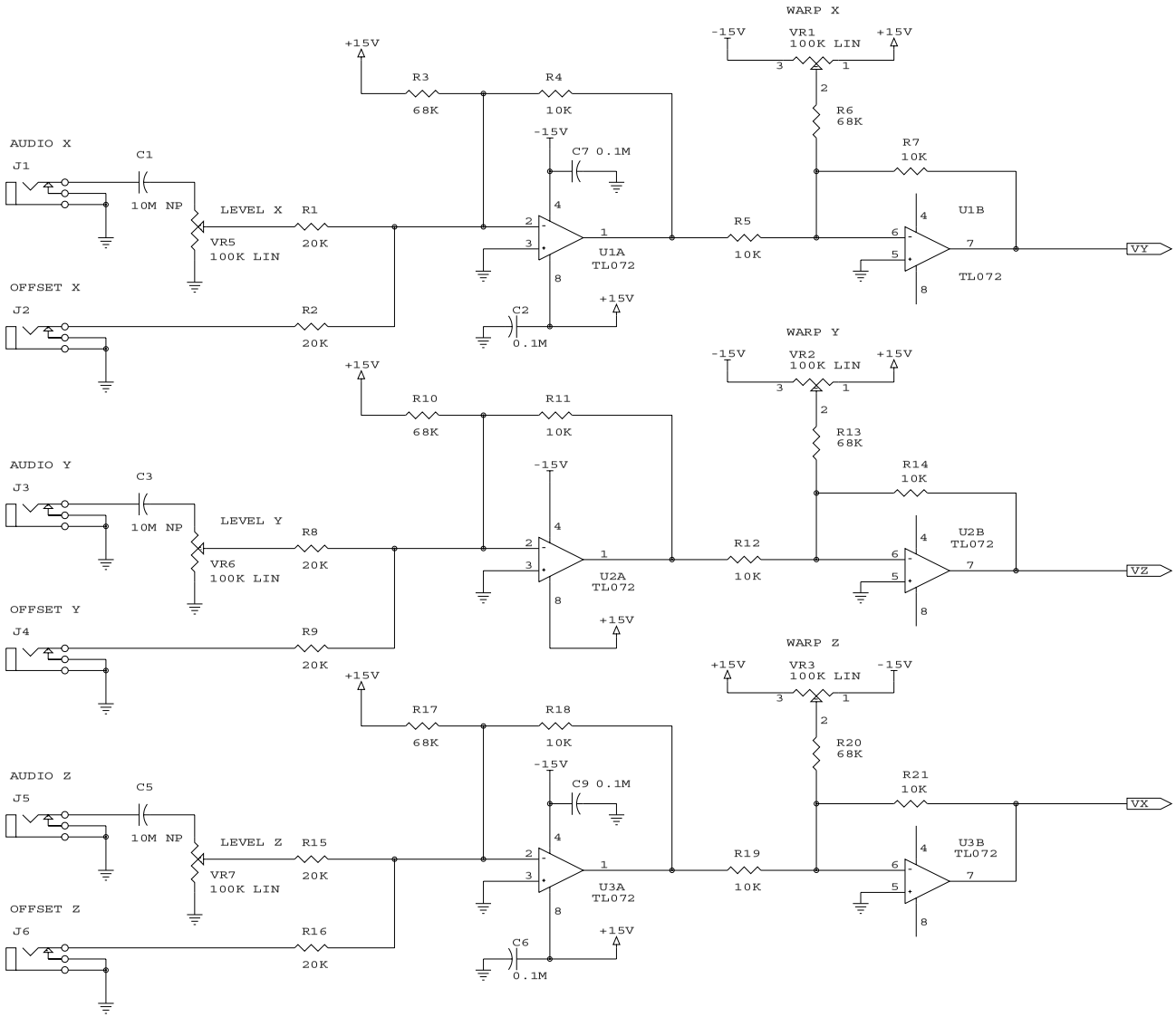

NOTE: THE 3 DRIVING VOLTAGES ARE SWAPPED WITH RESPECT TO THE CHIP NOMENCLATURE SO THAT THE TRANSFER FUNCTION IS: Vx(Vy/Vz)^m.

LINK
M510_2.SCH

SYNTHESIS TECHNOLOGY
6625 QUAIL RIDGE DR.
FORT WORTH, TX 76180
(817) 498-3782

Title		
MOTM-510: WAVEWARPER		
Size B	Document Number M510	REV A
Date: September 18, 2004	Sheet 1 of 2	

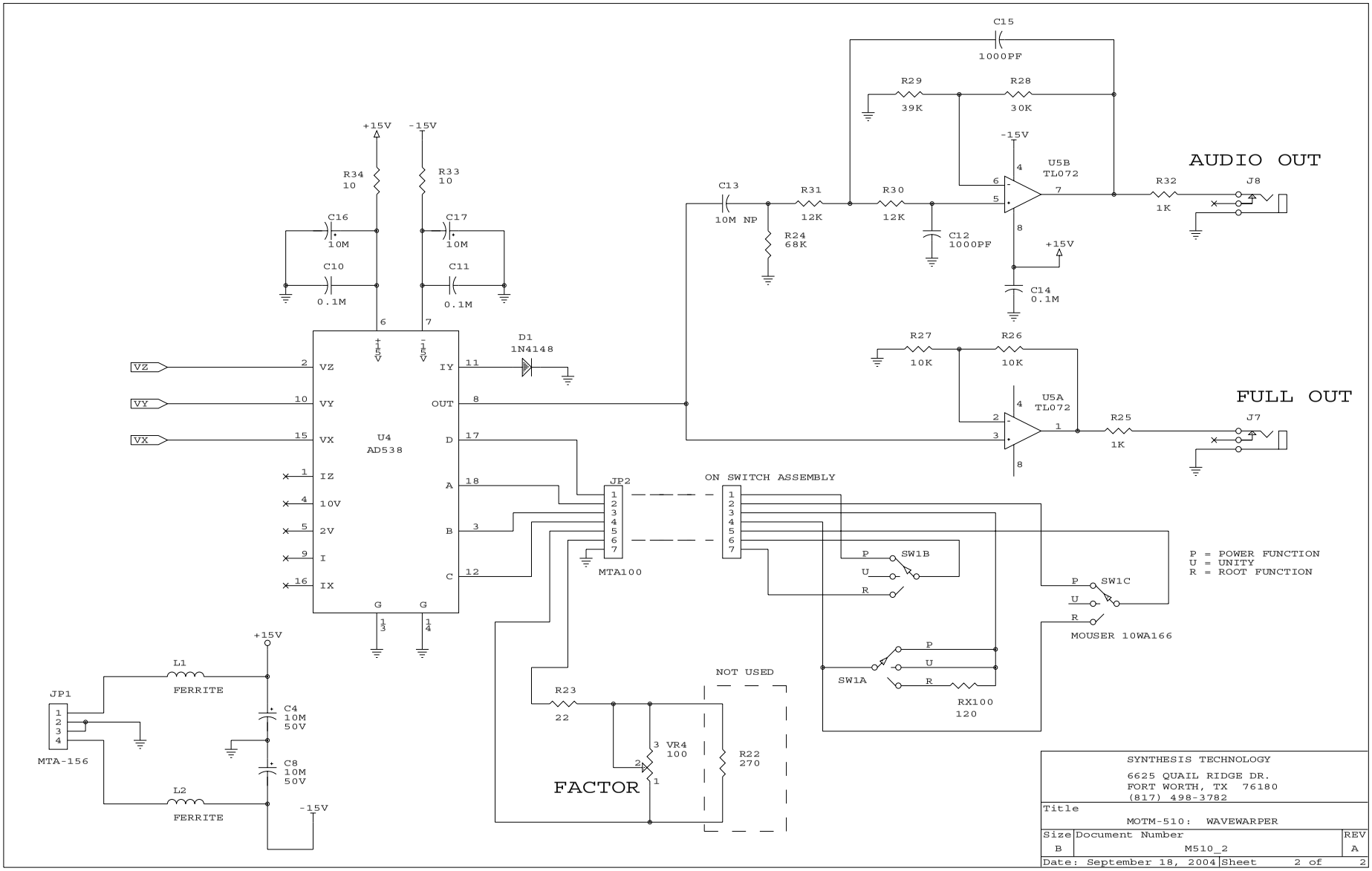
C15
1000PF
R29
39K
R28
30K
-15V
U5B
TL072
AUDIO OUT
R32
1K
J8
C13
10M NP
R31
12K
R30
12K
R24
68K
C12
1000PF
+15V
C14
0.1M
R27
10K
R26
10K
U5A
TL072
FULL OUT
R25
1K
J7
+15V
-15V
R34
10
R33
10
C16
10M
C17
10M
C10
0.1M
C11
0.1M
D1
1N4148
VZ
VY
VX
U4
AD538
IZ
10V
2V
I
IX
IY
OUT
D
A
B
C
G
JP2
MTA100
ON SWITCH ASSEMBLY
SW1B
SW1C
MOUSER 10WA166
P = POWER FUNCTION
U = UNITY
R = ROOT FUNCTION
SW1A
RX100
120
NOT USED
R23
22
VR4
100
R22
270
FACTOR
JP1
MTA-156
L1
FERRITE
L2
FERRITE
C4
10M
50V
C8
10M
50V
SYNTHESIS TECHNOLOGY
6625 QUAIL RIDGE DR.
FORT WORTH, TX 76180
(817) 498-3782
Title
MOTM-510: WAVEWARPER
Size
B
Document Number
M510_2
REV
A
Date: September 18, 2004
Sheet 2 of 2

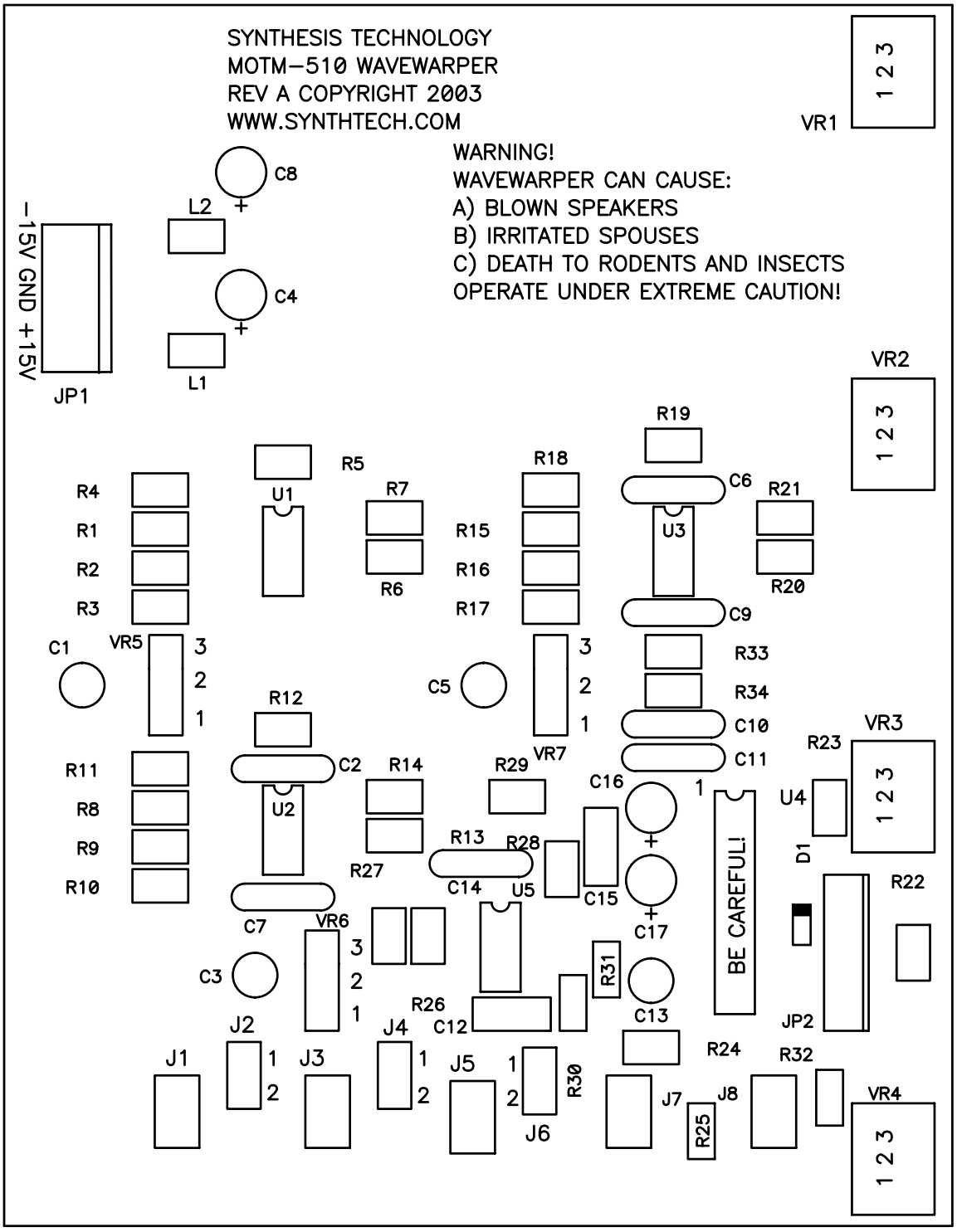
SYNTHESIS TECHNOLOGY
MOTM-510 WAVEWARPER
REV A COPYRIGHT 2003
WWW.SYNTHTECH.COM
WARNING!
WAVEWARPER CAN CAUSE:
A) BLOWN SPEAKERS
B) IRRITATED SPOUSES
C) DEATH TO RODENTS AND INSECTS
OPERATE UNDER EXTREME CAUTION!
-15V GND +15V
JP1
C8
L2
C4
L1
VR1
VR2
VR3
VR4
VR5
VR6
VR7
R1
R2
R3
R4
R5
R6
R7
R8
R9
R10
R11
R12
R13
R14
R15
R16
R17
R18
R19
R20
R21
R22
R23
R24
R25
R26
R27
R28
R29
R30
R31
R32
R33
R34
C1
C2
C3
C5
C6
C7
C9
C10
C11
C12
C13
C14
C15
C16
C17
U1
U2
U3
U4
U5
D1
J1
J2
J3
J4
J5
J6
J7
J8
JP2
BE CAREFUL!