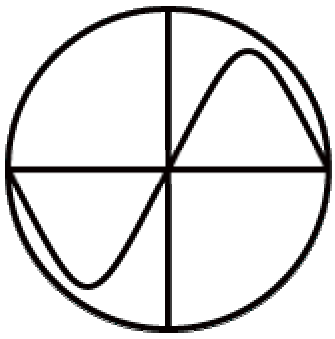

synthesis technology

MOTM-101 Noise Generator/S&H
Assembly Instructions

Synthesis Technology
6625 Quail Ridge Dr.
Fort Worth, TX 76180
817-498-3782

www.synthtech.com

March 26, 2001

MOTM-101 PARTS LIST

Please carefully check that all parts are in your kit. If you have a suspected shortage, please call or email. If you get free extra stuff, keep it for next time.

❒ **Capacitor** bag, containing the following 27 parts:

3ea 10mfd, 50V Electrolytic	C1, C11, C12
2ea 3M3mfd, bi-bolar Electrolytic	C2, C5
1ea 33M, 35V Electrolytic	C18
1ea 10M non-polar (B.P.) Electrolytic	C25
3ea 1000pf (1N) yellow box polycarbonate	C7, C20, C24
3ea 0.01mfd (10N) yellow box polycarbonate	C6, C21, C23
2ea 0.47mfd (470N) yellow box polycarbonate	C13, C14
1ea 0.1mfd (100N) yellow box polycarbonate	C8
10ea 0.1mfd ceramic axial	C3, C4, C9, C10, C15, C17, C19 C22, C26, C27
1ea 0.047mfd polypropylene	C16

❒ **Resistor** bag, containing the following 33 parts:

8ea 100K 5% (brown, black, yellow)	R1, R2, R4, R11, R19, R21, R24, R30
6ea 10K 5% (brown, black, orange)	R3, R5, R6, R14, R20, R25
6ea 1K 5% (brown, black, red)	R9, R10, R13, R23, R29, R31
3ea 1K5 5% (brown, green, red)	R27, R28, R32
2ea 3K 5% (orange, black, red)	R17, R26
1ea 4K7 5% (yellow, violet, red)	R7
1ea 270K 5% (red, violet, yellow)	R8
1ea 150K 5% (brown, green, yellow)	R12
1ea 220K 5% (red, red, yellow)	R15
1ea 47K 5% (yellow, violet, orange)	R16
1ea 560K 5% (green, blue, yellow)	R18
1ea 2K2 5% (red, red, red)	R22
1ea 100 ohm (brown, black, brown)	R33

❒ **IC** bag, containing the following 12 parts:

4ea TL072 op amp	U2, U3, U7, U8
2ea CMOS timer (7555/LMC555)	U4, U5
1ea TLE2072 op amp	U1
1ea LF398 sample & hold	U6
2ea 1N5240B 10V Zener diode	D1, D2
1ea 1N4148 signal diode	D4
1ea red panel mounted LED	D3

MOTM-101 PARTS LIST (cont)

❒ **Misc** #1 bag, containing the following 6 parts:

2ea Axial ferrite beads (plain, gray things)	L1, L2
2ea SPDT toggle switch M2012	SW1, SW2
1ea 100K cermet trim pot	TP1
1ea MTA-156 power connector	JP1

❒ **Knobs**, 4ea, ALCO PKES90B1/4

❒ **Jacks**, 7ea Switchcraft 112D

❒ **Pots**, containing the following:

3ea 100K linear, Spectrol 149-71104	VR1 – VR3
1ea 100K log, Spectrol 148-9609-104	VR4

❒ **Front panel**

❒ **Mounting bracket**

❒ **Wire** bag, containing the following 11 wires:

4ea RG-174 coax, 4 1/2 inches
1ea RG-174 coax, 7 inches
1ea 2 conductor with ground wire, 4 inches
2ea 3 conductor, twisted (white/gray/orange)
1ea 3 conductor, twisted (red/white/black)
1ea orange/white twisted pair
1ea PWR-20 power cable 20”

❒ **Hardware** bag, containing:

4ea #8-32 x 3/8 black screws (for mounting module to rack)
4ea #6-32 x 1/2 zinc screws (for attaching pc board to bracket)
4ea ¼ inch aluminum spacers
6ea #6 KEPS nuts (2 for attaching bracket to front panel, 4 for pc board)
2ea small heatshrink tubing
8ea small tie-wraps

❒ **Organic Solder**

❒ **No-clean Solder**

❒ **PC Board**, MOTM-101

GENERAL INFORMATION

Thank you for purchasing the MOTM-101 Noise/Sample & Hold. If you have any issues concerning the building or use of the kit, please contact us at (817)498-3782 or by email: synth1@airmail.net

This kit should take the average builder between 2 and 3 hours. However, please remember this is NOT a speed contest, it is an accuracy contest. There is no rule that you have to complete the entire kit in one session (as long as you wash the flux off!).

Successful kit-building relies on having the proper tools. Here is a list of what you will need to build and calibrate your MOTM-101.

* Soldering iron, 50W max power
* Needle-nose or chain-nose pliers
* Diagonal cutters
* Wire strippers
* Small, flat screwdriver for adjusting the trimmer
* Allen key set for securing the knobs (1/16" or 1.59mm)
* Lead bending tool (optional, but makes the job go much faster)
* DVM or oscilloscope (optional for calibration. Can calibrate by ear)
* Heat gun for heat-shrink tubing (optional, but HIGHLY recommended)

For more information of tools used and suggestions, see the MOTM FAQ at www.synthtech.com

HOW TO FOLLOW THE DIRECTIONS

Please read the entire instruction before proceeding. There may be valuable information at the end of the instruction. Each instruction has a check box ❒ next to it. After you complete the instruction, check the box. This way you can keep track of where you are in the process.

VERIFY THE PARTS LIST

❒ Verify that all of the parts are in the kit as shown on the parts list.

A WORD ON SOLDERING

There are 2 very different types of solder used in the kit. Most of the soldering uses 'Organic Flux' solder. ***This is strictly for use on the pc board, and is NOT to be used on the front panel wiring!***

In order for solder to 'stick' to the copper, a chemical called 'flux' is embedded in the solder. The flux leaves a residue on the pc board that should be cleaned with warm water. DO NOT USE SOAP OR OTHER CLEANSERS. Most of the parts in the kits are 'waterproof', and can be washed in the sink. The flux is OSHA approved for flushing down the drain, so don't

worry about that! A soft brush is used to gently scrub the board. We recommend a 'fingernail brush', which is about 1" x 2" and be found for about $1.

The other type of solder is called 'No Clean Flux', because as the name implies it does not require washing. This solder is used on wiring the pots, switches, jacks, etc. This solder is harder to use on the pc board, because even when melted it is not very fluid (about the consistency of toothpaste). We will use it VERY SPARINGLY on the pc board.

OK, let's get started on the board!

PART #1: SOLDERING THE RESISTORS

Since there are more resistors than anything else, we will start here. If you do not know the resistor color code, refer to the parts list. Resistors are not polarity sensitive, but the board will be easier to debug (and look nicer) if you point the first color band in the same direction for all the parts. The color code is also in the README FIRST document that every new customer receives.

❒ Find the **RESISTOR** bag.

❒ Find the MOTM-101 blank pc board. There is a copy (larger than actual size) of the silkscreen which shows where the parts go at the end of this document. It will be useful if you locate the part on the print first, put the part in the board, then 'check off' the silkscreen. All parts are inserted from the side of the board with the white silkscreen (the "top" side).

❒ We will stuff the resistors by value to make things easier. The resistors (and other long-leaded parts) are inserted on 0.4 inch spacings. The important thing is to be sure that the part is sitting all the way down on the board. Push the leads in the holes, push the part on the board, and then bend the leads on the bottom outwards to a 45 degree angle (roughly!). This is called 'cinching the leads': keeps the part from falling out! From the bottom of the board, solder (with the organic flux), applying heat to the pad for about a half second first, then applying just enough solder to make a small, flat puddle.

The rule of soldering: don't use too much, you can always add more! Cut the leads flush with the top of the solder.

Locate the 100K resistors and solder into R1, R2, (by power connector JP1), R4 (below SW1), R11 (below D2), R19 (by U7), R21 (above C20), R24 (below C9), & R30 (by U6).

❒ Locate the 10K resistors and solder into R3 (by U1), R5 and R6 (above TP1), R14 (above U3), R20 (below C20), & R25 (below C24).

❒ Locate the 100 ohm resistor and solder into R33 (by U8).

- ❒ Locate the 270K resistor and solder into R8 (by U2).
- ❒ Locate the 1K resistors and solder into R9 and R10 (by D3), R13 (by J3), R23 (by U4), R29 (by SW2), & R31 (above J5).
- ❒ Locate the 150K resistor and solder into R12 (above C8).
- ❒ Locate the 220K resistor and solder into R15 (by U3).
- ❒ Locate the 3K resistors and solder into R17 (by VR2) & R26 (by SW2).
- ❒ Locate the 47K resistor and solder into R16 (above C7).
- ❒ Locate the 1K5 (1.5K) resistors and solder into R27 (left of U8), R28 (by SW2), & R32 (by VR2).
- ❒ Locate the 4K7 (4.7K) resistor and solder into R7 (by U2)
- ❒ Locate the 560K resistor and solder into R18 (by U3).
- ❒ Locate the 2K2 (2.2K) resistor and solder into R22 (by D4).

That should be all of the resistors! And guess what: you are about 1/4 of the way done!

PART #2: BOARD WASH #1

- ❒ Verify all the resistors are in the correct position.
- ❒ Verify all the resistors are flat on the board. Correct if needed.
- ❒ Wash the board in warm water, gently scrubbing both sides.
- ❒ Shake the board a couple of time, blot dry with an old towel (the leads will frazzle the good towel). Let dry about 15 minutes.

PART #3: CAPACITORS

- ❒ Locate the **CAPACITOR** bag.
- ❒ Locate the 1000pf yellow box caps. They are marked 1N. Solder into C7, C20 and C24.

❒ Locate the 0.1mfd yellow box cap. It is marked 100n or 104. Solder into C8.

❒ Locate the 0.01mfd yellow box caps. They are stamped 10n or 103 . Solder into C21, C6, and C23.

❒ Locate the 0.1mfd axial caps. They are stamped 104 . Solder into C3, C4, C9, C10, C15, C17, C19, C22, C26 and C27.

❒ Locate the 0.47mfd yellow box caps. They are stamped 470nJ . Solder into C13 and C14.

❒ Locate the 0.047mfd polypropylene cap. It is a reddish-orange color, marked .047K. Solder into C16.

❒ Locate the 10mfd electrolytics. Note that there is a stripe on the NEGATIVE terminal. The pc board has a + on the POSITIVE terminal. Carefully stick the capacitors into C1, C11 and C12 with the stripe ***away*** from the + pad on the board.

❒ Locate the 3M3 bi-polar electrolytics. They are dark blue, with the letters BP stamped on them. These types of electrolytics are NOT polarity sensitive. Solder into C2 and C5.

❒ Locate the 33mfd electrolytic cap. It also has a black stripe on the negative terminal. Solder into C18. Be SURE you didn't mix up with the 10mfd caps!

❒ Locate the 10mfd non-polar cap. It solders into C25. Leads are NOT polarity sensitive.

PART #4: MISC and IC STUFF

Almost done with the parts on the pc board! This will finish up the soldering with the organic flux.

❒ Locate the **MISC #1** bag and the **IC** bag.

❒ Locate the ferrite beads. They are axial parts, gray colored with no markings. These are non-polar, and are soldered into L1 and L2.

❒ Locate the MTA-156 power connector. Solder into JP1. Note that the connector has a 'locking tab' on one side. This side is the "inside" facing relative to the pc board. Note the silkscreen symbol for JP1 has a line on one side, indicating this is the side where the locking tab goes.

❒ Locate the TL072 op amps. Solder into U2, U3, U7 and U8. Note that Pin #1 is the

square pad. Pin #1 is the pin near the very small 'dimple' in the top of the part. All of the ICs point 'downwards' on the pc board. The parts may be marked '072BD' or 'TL072CP', depending on manufacturer. ***IMPORTANT! Do **NOT** confuse these parts with the TLE2072CP op amp!! That part is **special** and goes into U1.***

❒ Locate the 7555/LMC555 timers. Solder into U4 & U5.

❒ Locate the LF398AN sample & hold. Solder into U6.

❒ Locate the TLE2072CP opamp and solder into U1.

❒ Locate the 2 1N5240B Zener diodes. Look closely, they are marked in black ink with 1N5240. DO NOT GET THESE MIXED UP WITH THE 1N4148 OR THE CIRCUIT WILL NOT OPERATE! Solder into D1 & D2. Orient the black band pointing to the left, like the white band on the pc board symbol.

❒ Locate the 1N4148 signal diode. This is a clear glass axial part with a black band around one end. Solder into D4. Notice that the silkscreen symbol has a distinct band on one end. Insert the banded end (called the cathode) into the pc board in the correct pad.

PART #5: WASH THE BOARD AGAIN

❒ Verify all the parts are in the correct locations. Check the diodes and C1, C11 & C12 orientation. Make sure all the ICs are pointing downwards.

❒ Inspect the solder joints. Any solder shorts? Too much solder? Missing joints?

❒ Wash the board under warm water. Scrub gently. Dry.

THIS IS A GOOD STOPPING PLACE TO REST OR PUT THE KIT AWAY UNTIL LATER.

You are now finished with the Organic flux solder. All soldering past this point is using the No-Clean solder. You do not have to wash the board anymore.

PART #6: FINISHING THE PCB

You will now solder in the remains parts on the pcb in preparation for wiring to the front panel. USE THE NO-CLEAN SOLDER. BE CAREFUL!

❒ Locate the blue trim pot in the **MISC #1** bag. Solder into TP1.

❒ Locate the 3 Spectrol #149 pots and the #148 pot. **IMPORTANT**: in order for the pc board to properly align into the front panel, each pot must be absolutely flat on the pc board, with the shafts pointing away from the pc board.

Also, the 148 pot goes in VR4! The other 3 solder into VR1, VR2 and VR3.

❒ Locate the **WIRE** bag. Note that the pre-stripped wires all have a short end and a longer end. THE SHORT END GOES IN THE PC BOARD.

❒ Locate the white/orange twisted pair. Solder the WHITE wire into the D3 box, in the hole marked ANODE (square pad).

❒ Solder the ORANGE wire short end into D3, in the CATHODE (round) hole.

❒ Locate the red/black/white twisted wire. Solder the RED short end into SW2, into the top hole marked HOLD (round pad).

❒ Solder the BLACK short end into SW2, middle hole (round).

❒ Solder the WHITE wire into SW2, bottom hole marked TRACK (square pad).

❒ Locate the 5 pieces of RG-174 black coax cable. Again, note that one end has longer wires stripped than the other. The short ends will go in the pc board in positions J1-J4 & J7. Look at the pc board. Notice that in positions J1-J4 & J7, there is a large hole pad (lower pad) and a smaller pad (top hole). The braided wire is soldered into the larger hole. The smaller, inner conductor goes in the top hole. There are **TWO** lengths of cable: *the longer cable is soldered into J1.*

Note there is a row of 'plain' holes along the bottom, under J1 - 7. These holes are for threading the small white tie-wraps for holding the coax against the pc board. The holes are designed so that coax exits the pads directly under the pads. The coax then lies flat on the pcb. The tie wrap enters the left hole from the top, comes out the right hole from the bottom, and is then secured so that the coax is tightly held against the top of the pc board. Note that the tie wraps must thread from the top, or there may not be sufficient room between the pc board and the mounting bracket. The excess tie wrap is cut off. See the illustration pages.

❒ Solder, then tie-wrap the 4 short coax cables J2, J3, J4, & J7. Trim the excess. NOTE: because of the way the coax is made, chances are more of the braid will go in the hole than the inner conductor. This is normal, unlike all the other parts and wires. The secret is to get the coax firmly soldered and tied down ***flat.***

❒ Solder the 1 LONG RG-174 coax piece into J1. Attach the tie-wraps and trim.

❒ The other type of coax wire is built differently. Note that it has 2 conductors (red and black) and a thinner wire, called a 'drain wire'. The drain wire is used to connect to ground, just as the thicker braid is used in the RG-174 black coax. This wire goes into the S&H IN pads, J6.

Solder the RED wire of a 2 conductor coax to the TOP hole (3) of J6.

❒ Solder the BLACK wire into the MIDDLE hole (2) of J6.

❒ Solder the drain wire into the bottom square hole (1) of J6.

❒ Solder a 3-conductor white/gray/orange into J5. The WHITE wire goes to pad 3, the GRAY wire goes to pad 2, and the ORANGE wire goes to pad 1. Lay the wire flat on the pcb and attach the tie wrap.

❒ Solder a 3-conductor white/gray/orange into SW1. The WHITE wire goes to pad 3, the GRAY wire goes to pad 2, and the ORANGE wire goes to pad 1.

YOU ARE NOW FINISHED WITH THE PC BOARD WORK! BREAK TIME.

PART #7: FRONT PANEL PREPERATION

You will now attach components to the front panel. It is HIGHLY recommended that you use a set of hollow shaft nut drivers, NOT PLIERS, to tighten the nuts. This prevents scratching. NOTE: all references to part orientation is from the REAR of the panel.

❒ Locate the 7 Switchcraft jacks. Notice that from the rear, there is a beveled corner. This corner is ALWAYS CONNECTED TO GROUND, USUALLY WITH THE BRAIDED CONDUCTOR. Each jack has a flat washer, a lockwasher, and a ½" hex nut. Remove the nuts and washers from each jack. Place aside. Keep the lockwasher on the jacks.

❒ Insert the 7 jacks/lockwashers, with the beveled corner in the ***upper right*** corner, into the 7 holes. Place the flat washer on the jack, then the hex nut. Hold the jack with one hand on the backside, keeping it 'square'. Tighten the hex nut with a nut driver. NOTE: when tight, not much of the exposed threads of the jack are exposed.

Check to see that each jack has the bevel in the upper right corner, and all jacks are neatly lined up.

❒ Find the 2ea SPDT toggle switches. They are attached to the front panel by removing the first nut, and inserting them from the rear (the lockwasher goes on the BACK of the panel). Be sure the switch is straight "up and down" and tighten. Use a hollow-shaft nut driver! And, do not overtighten, you can torque the switch bushing off. The 2 switches go in the SOURCE hole and the MODE hole. It does not matter which terminal is on the top, just that they are oriented 'up and down' and not 'side to side'.

You are now ready to attach the pc board to the bracket, and then wire up to the panel.

PART #8: ATTACH PC BOARD TO BRACKET/PANEL

❒ In the **HARDWARE** bag, locate 4 #6-32 x ½ screws, 6 #6 KEPS nut, and 4 spacers.

❒ Locate the mounting bracket. The pc board attaches to the bracket, with the 4 screws threading from the top of the board, through the spacers, through the bracket, and then out the bottom of the bracket. The #6 KEPS nut attaches on the bottom of the bracket. Note the bracket has 2 long mounting flanges with a hole in each. These attach to the 2 threaded studs sticking out of the rear of the panel. The 4 pots each stick in it's panel hole when the bracket is screwed down on the 2 threaded posts.

Attach the pc board to the bracket. The 2 mounting flanges are located in between VR1 & R15, and next to C17. The flanges will point upwards when the pc board is sitting on the bracket. Note that the bracket holes for the pc board are actually oblong. This is to allow adjustment for the pc board to firmly press up against the back of the panel. As a start, set the 4 screws ALL THE WAY TO THE LEFT of the oblong holes. ***Loosely*** tighten then 4 KEPS nuts on the bottom.

❒ THIS IS A VERY IMPORTANT STEP, SO PAY ATTENTION AND READ ALL OF IT BEFORE PROCEEDING!

Note that each of the 4 pots on the pc board have 2 hex nuts and a flat washer. Remove the first hex nut and the washer. Set aside.

What you will do now is adjust the remaining hex nuts so that when the bracket is all the way down on the panel's threaded studs, all the pot hex nuts touch the rear of the panel.

Screw (by hand) each hex nut on the pots so that it is all the way on (touching the face of the pot). Now, pick up the pc board/bracket assembly and carefully slide it over the 2 threaded studs, making sure the pots are aligned in the holes. Use 2 #6 KEPS nuts and tighten the bracket to the panel.

❒ Loosen the 4 KEPS nuts on the bottom of the bracket. Slide the pcb ALL THE WAY TO THE RIGHT AS FAR AS IT WILL GO, so that the 4 pot nuts are all pressing against the panel. By hand, put hex nuts on the outside threads of VR1 and VR4 to keep the pc board in place. Now, tighten the 4 KEPS nuts on the bracket. The pcb and bracket should be secure, with no gaps visible between the panel and the pot nuts. There will be a gap from the edge of the *pc board* to the panel.

❒ Remove the hex nuts on VR1 & VR4. For all 4 pots, first put on the flat washer, Then the hex nut. Tighten with a ½" nut driver.

PART #9: FINISH WIRING TO THE PANEL

❒ Attach and solder the RED wire on SW2 to the top terminal of the switch.

❒ Attach and solder the BLACK wire on SW2 to the middle terminal.

❒ Attach and solder the WHITE wire on SW2 to the bottom terminal.

❒ Attach and solder the WHITE wire on SW1 to the top terminal of the switch.

❒ Attach and solder the GRAY wire on SW1 to the middle terminal.

❒ Attach and solder the ORANGE wire on SW1 to the bottom terminal.

❒ You will now attach the panel LED. Find the LED in the IC bag.

IMPORTANT: look and see that the LED has 2 leads, and one is LONGER than the other. This is the ANODE lead. YOU MUST BE VERY CAREFUL TO SOLDER THE ANODE TO THE WHITE WIRE IN D3! BE SURE THAT THE WHITE WIRE IS IN THE 'ANODE' (SQUARE) PAD, AND NOT THE ORANGE WIRE!!!

The LED is a 'press' fit into the panel. It is snug but loose enough to be removed if you ever need to. Press the LED in from the front side, WITH THE LONG ANODE LED ON THE BOTTOM, TOWARDS THE JACKS.

❒ Unravel about an inch of the orange/white wire. Slide a piece of heat-shrink tubing over the white wire. Spread the LED leads apart slightly, to allow more room to solder. Cut the bottom LED lead halfway. Solder the white wire to the bottom (anode) LED lead.

❒ Slide a piece of heat-shrink tubing over the orange wire. Cut the top LED lead in half. Solder the wire to the other (cathode) LED lead.

❒ Slide the heat-shrink tubing over the LED leads and shrink with a heat gun or other

source.

❒ Now you will solder the coax wires to the jacks. Note that from the rear, the jack lugs are referred to as 'LEFT', 'TOP', and 'BEVEL'. The left lug is the signal from the outside plug, the top lug is the switched signal, that is disconnected when a plug is inserted, and the bevel is ALWAYS ground. The soldering of the jacks is a little crowded and tricky, so take your time and be careful.

❒ Solder the VIBRATO (J4) coax into the jack. The braid goes to the BEVEL, the inner wire goes to the LEFT lug.

❒ Solder the SLOW [random] (J3) coax to the SLOW jack.

❒ Solder the PINK (J2) coax to the jack.

❒ Check your wiring. All the braids are soldered to the BEVEL lug. All of the inner wires are on the LEFT lugs. NOTHING is soldered to the TOP lugs. We will solder the WHITE jack **last**.

❒ Solder the S&H OUT (J7) coax to the OUT jack.

❒ Solder the RED wire of the coax in S&H IN (J6) to the LEFT lug of the IN jack.

❒ Solder the BLACK wire of J6 to the TOP lug of S&H IN jack.

❒ Solder the DRAIN wire of J6 to the BEVEL lug of the S&H IN jack.

❒ Solder the WHITE wire in CLOCK (J5) to the LEFT lug of the EXT CLK jack.

❒ Solder the GRAY wire of J5 to the TOP lug of EXT CLK jack.

❒ Solder the ORANGE wire to the BEVEL lug of the jack.

❒ Solder the long coax in J1 to the WHITE jack. Use the extra tie wrap to bundle the switch and LED wires together "above" R16.

❒ Rotate the front panel pots fully counter-clockwise. Locate the **KNOBS**. Notice each knob has a thin white line on it. Place the knob on the pot shaft, align the white line to the '0' tick mark and tighten the hex screw. The silver part of the knob has a protective clear plastic overlay that can be removed if desired. Gently rub with your fingernail and it will peel off.

****

CONGRATULATIONS! YOU HAVE FINISHED BUILDING THE MOTM-101!

****

All that's left to do is to adjust the unit for noise output level.

❒ Using a small, flat screwdriver turn the white screw part of the trimmer until it is half-way. This is when the slot is vertical.

❒ Apply power to the MOTM-101. Turn the SPEED pot to 7, and the LED should flash at a steady rate. If the LED does not flash, see the TROUBLESHOOTING section.

❒ With a DVM on AC volts, 2V scale, measure the WHITE noise output. The easiest place is across the jack lugs. Adjust the trim pot for ~0.85VAC. This roughly corresponds to 10 volts pk-pk. If you have a scope, then simply adjust the trimmer for a 10V pk-pk signal out of WHITE. If there is nothing coming out, see the TROUBLESHOOTING section. If you do not have any test equipment, set the trimmer in the middle of the range (the slot will be vertical).

IMPORTANT!

Due to the internal time constants in the Noise circuitry, there is a 2-3 second power-up delay until the noise circuit achieves full output level.

The vibrato circuit is a 7Hz, very high Q bandpass filter. Here are the characteristics of the 2 choices. Each choice generates a different output. In both cases, the VIBRATO output is a **CONTROL VOLTAGE** to other modules, usually a VCO, VCA, or VCF.

a) WHITE NOISE - will generate a steady vibrato signal with random amplitude, based on the VIBRATO panel setting. At higher levels, the output will be a steady 7Hz, 10V pk-pk sine wave. At extreme levels, there will be slight clipping.

b) CLK OSC - when the S&H clock is triggered (internal osc or external clock plugged into the jack), the bandpass filter will 'ring', creating a damped sine wave of 7Hz. The sine way exponentially decays with a time constant controlled by the VIBRATO panel pot. The larger the setting, the longer the decay time. The effect is that when plugged into a VCO's input, you hear a 'BOING'. When plugged into a VCA, you get a decaying tremolo. There will be settings of SPEED and VIBRATO that will generate a steady 7Hz sine wave.

❒ Test the sample and hold. Set the LEVEL to 10. Set the SPEED to 6. Set the switch to HOLD. If you have a DVM, set to 20 volts DC scale and look at the OUT voltage

at the jack. Each time the LED flashes, the voltage should change. The voltage will stay at the value until the LED flashes again. The voltage will be approx. from -10V to +10V, but you may see a smaller range (it just depends on the voltage of the white noise the instant the sample clock triggers). By ear, plug the OUT jack to the input of a VCO. You should hear random notes.

The SLEW adds 'glide' to the output of the S&H. On the 0 setting, the signal is passed straight through. As you increase the SLEW, you should hear the rise/fall times lengthen. Remember, it is possible to clock the S&H faster than the SLEW settings. This causes the output amplitude to drop (it is a lowpass filter, after all!).

❒ Listen to WHITE and PINK noise. The PINK is a low-pass filtered version of WHITE. **CAUTION: THESE ARE HIGH AMPLITUDE SIGNALS! DON"T PLUG THEM DIRECTLY INTO A POWER AMP! YOU HAVE BEEN WARNED!!**

❒ Test the SLOW output. This is a CONTROL VOLTAGE similar to VIBRATO. It is a VERY LOW low-pass filtered version of PINK. It has BOTH random amplitude and random frequency. Driving a VCO, you should hear wildly moving glissandos. On a DVM, the DC voltage will rapidly fluctuate about ground.

If you do not get these results, carefully check over the unit before contacting us for assistance.

ELECTRICAL THEORY OF OPERATION

The following discussion explains how the circuit operates, and suggests area of possible modification. Refer to the schematic.

PAGE #1 - NOISE GENERATOR

The white noise is generated by 2 Zener diodes D1 and D2. R1 and R2 bias the diodes on. The noise is a semiconductor by-product of how the diodes are made. Normally, the noise is such a low level (about 100 MILLIONTHs of a volt) that it is ignored. However, we want that noise, so we will boost it up. The TLE2072 is a VERY high speed, high gain-bandwidth op amp which is used to boost the small Zener noise up to MOTM levels.

Since the Zener diodes are rated for 10 volts, there is a DC offset at the junction of R2 and D2. Capacitor C2 removes the DC level, and so only the noise is fed into really big gain amplifier U1A. The gain is R4/R3, or about 10. Having such a big gain means any offset voltage U1A has (usually about 0.003 volts) gets amplified as well. So, capacitor C5 again removes any DC level from the noise. Now a second amplifier, with the trim pot, is used to boost the signal another factor of 6 or so. The total gain through both amplifiers is (10)(6) or about 60! The trimmer sets the output amplitude at +-5V pk-pk.

Now we filter the noise 3 different ways to get different effects. U2A is a lowpass filter at around 650 Hz that remove high frequency content from the white noise. To be technical, pink noise has equal energy per octave. Pink noise is used in room equalization to reduce

feedback and echos. Note: you may hear quite a difference in volume between white and pink, even at the same output amplitudes. This will depend on the playback system.

The pink noise is then REALLY low-pass filtered by U2B at about 11 Hz. This generates a near- DC signal, that averages about 11Hz. *The amplitude of this signal can be adjusted by lowering R11 (bigger output).* With the values shown, it will swing about 1.5Volts.

The vibrato circuit is from *Electronotes*. It is a 7Hz bandpass filter. The Q of the filter is set by feeding back the output to the + input of the op amp U3A. R17 and R32 form a voltage divider on the output to get +-5V signals.

PAGE #2 - Sample & Hold

A sample and hold is an analog voltage memory: it's job is to sample an input, and hold it until told to re-sample. The special chip U6 (LF398AN) is a fully integrated S&H circuit. When the signal SH_CLK is +5V, the input voltage on pin 3 is connected to pin 5. This is called the 'TRACK' portion. When the SH_CLK is 0V, the chip holds the voltage constant.

How does it do this? Look on pin 6 of the LF398AN. There is a 0.047mfd capacitor that is used to store the voltage. During the TRACK interval, the cap charges up to the input voltage. During the HOLD portion, the input is disconnected from the cap. And the cap acts like a programmable battery. The cap used is a SPECIAL type with a certain construction (it uses a polypropylene dielectric) that will allow the voltage to stay on the cap for long periods (many seconds). However, the cap has an internal leakage that causes the voltage to decay. This is called '*droop'*. In the MOTM-101, the droop rate is VERY small, about 50mV per minute.

Since a S&H is routinely used as a 'sequencer' of sorts, we need a clock. The timer U4 is out clock generator. The speed is set by the RC time constant of panel pot VR2 (plus R22) and cap C18. If you want faster overall speeds, reduce C18 to 2M2 or 1mfd. For slower speeds, increase C18 to 4M7.

The clock is the routed to the switching jack EXT CLK. If nothing is plugged in, the internal timer is used. However, any AC signal can be plugged in and the internal timer is switched out.

U7B is a voltage comparator set by R20 and R19 to trip at 1.36V. When the signal at pin 5 of U7a exceeds 1.36V. the output triggers.

The +-15 volt clock generated by U7B is split into 2 paths. The first path is through R28 and the panel LED, through R29. This generates a 0 to +5V clock that tracks the EXT CLK signal. The second path is through timer U5, which is configured as a 1-shot. The 1-shiot generates a very narrow pulse. This narrow pulse is to quickly acquire the S&H voltage. The pulse is +5V only for 1ms, then it is at ground. Since the LF398AN holds when the clock pin is at ground, the 1-shot's narrow pulse is used to sample, then hold the voltage.

Switch SW1 selects TRACK or HOLD. When set to TRACK, the output voltage of the S&H will equal the input voltage as long as the input is greater than +1.36volts. When less than that, the output voltage is held. I like to call this mode a 'wire with memory'.

The simple RC filter VR4+ R32 and C25 form the SLEW circuit. U8A is just a buffer. The reason we need R33 is that when VR4 is set to 0, the driving op amp U7A does NOT want to see a large capacitive load. So, we use a small series resistance to 'decouple' C25 from the output circuitry of U7A.

OPERATION

In this section, we will discuss how the MOTM-101 is used in various applications. Of course, these are only a few things to try. Experiment!

NOISE SECTION

The most important thing to remember is that the *White* and *Pink* noise outputs are **audio** signals, while the *Random* and *Vibrato* outputs are **control voltage** outputs.

The most common use of noise outputs is to simulate wind, rain, surf, explosions, and other such sound effects. The White noise output is also internally connected to the INPUT of the S/H circuitry. This will provide random voltages without patching anything into the S/H.

The Random output is used to add subtle "movement" to VCOs and VCFs. Normally, this output is attenuated first before using: remember it has an 2-octave maximum range!

The Vibrato output normally is patched to a VCO CV input. The resultant sound depends on where you set the jumper shunt. If the shunt is set on the NOISE setting, then the vibrato output is a "wandering" sine wave of about 7Hz. The "purity" of the output depends on the front panel VIBRATO setting. The higher the setting, the more noise is filtered out and the larger the output sine wave becomes.

If the shunt is set to the CLK position, then on the rising edge of the internal clock (or external clock if you have one patched in) the 7Hz bandpass filter "rings". This generates a dampened sine wave of 7Hz, that decays over time. The time it takes the sine wave to fully decay is now controlled by the VIBRATO front panel pot. The higher the setting, the longer the decay time. This CV, when patched into a VCO, will make a distinctive "bbboooiiinnnggggggg" sound.

For some very strange effects, you can try using White or Pink noise outputs as *clocks*. Try patching the Pink noise output into the MOTM-120 Sub-Octave Multiplexer!

SAMPLE & HOLD SECTION

The S/H output is a control voltage. Normally, it is patched into a VCO to produce random sequences (noise as the input signal) or a pattern (use a LFO waveform output as the input signal). The mode switch is used in the HOLD position.

Using a slow clock (about 1Hz), unusual effects can be obtained with the mode switch in the TRACK position. During half of the clock period, the output of the S/H is the input. During the second half, the output "freezes" and is held at a constant DC level until the next clock pulse.

Now, what is **really** fun is having multiple MOTM-101s, and forming an 'analog shift register'. This is connecting the S&H OUT of the first MOTM-101 into the S&H IN of the second. Both '101s are driven by the same EXT CLK signal.

This is where a MOTM-910 Cascade Multiple comes in **real** handy! Here's what you will need to here this really cool effect:

1ea MOTM-320 or MOTM-300 (for generating our EXT CLK signal)
1ea MOTM-910
2ea MOTM-101

a) using the PULSE out of the '320 or '300, patch into the top section of the '910. Take patchcords from the top section, and plug them in into the EXT CLK jacks of the '101s. Be sure to patch into the switching jack on the '910 (the "tail" of the top arrow).

b) patch from the S&H OUT of the first '101 into the second section of the '910.

c) patch from the second section of the '910 into the S&H IN of the second '101.

The scheme has 2 outputs: from '101 #1 and from '101 #2. Usually, these go into the FM inputs of 2 separate VCOs. What you will hear is a series (like a musical 'canon') of notes that are delayed 1 clock 'tick'. This default configuration is sampling the PINK noise inside '101 #1. The most common S&H input (into '101 #1) is a slow TRIANGLE or SAW wave. This will cause a series of rising/falling notes in a canonical form. You can extend this patch to 3 or 4 '101s to get very complex, but repeatable patterns.

TROUBLESHOOTING

If your MOTM-101 does not work, please verify ALL of the following before contacting us. The following reference directions assume that you are looking at the pc board with the panel to the right and the power connector to the left.

- ❒ All of the IC are pointing the same way: all notches are downwards.
- ❒ C1, C11 and C12 stripes are both pointing upwards.
- ❒ D1, D2 and D4's banded ends are both pointing to the left.
- ❒ The White Noise trim pot is not turned all the way counter-clockwise.
- ❒ The braided wire on the coax goes to the beveled side of the jacks.

❒ The board has all the right parts in all the right places.

❒ No solder shorts or missing joints.

If you still can not get the module to perform correctly, please contact us by phone at 817-498-3782 or by email to synth1@airmail.net

Thank you for purchasing the MOTM-101 kit.

SPECIFICATIONS
MOTM-101 NOISE/S&H

NOISE SECTION

White Noise Output	10V pk-pk (trimmed)
Pink Noise Output	6V pk-pk typical
Random Output	1.5V pk-pk typical, 50Hx max freq.
Vibrato Output	10V pk-pk at full setting, 7Hz typ.
Output Impedance	1K typical

S&H SECTION

External Clock	+1.35V min, DC to 100Hz (PULSE works best)
Internal Clock	0.1Hz to 20Hz, typical
Input Voltage Range	-5V to +5V, max.
Output Sample Droop	10mv in 30 seconds, typical
Input Impedance	50K min
Output Impedance	1K typical

GENERAL

Power Supply	-15VDC @ 20 ma +15VDC @ 20 ma
Size	2U x 5U 3.47" x 8.72" 88.1mm x 221.5mm
Depth behind panel	4.375 " 111.1mm

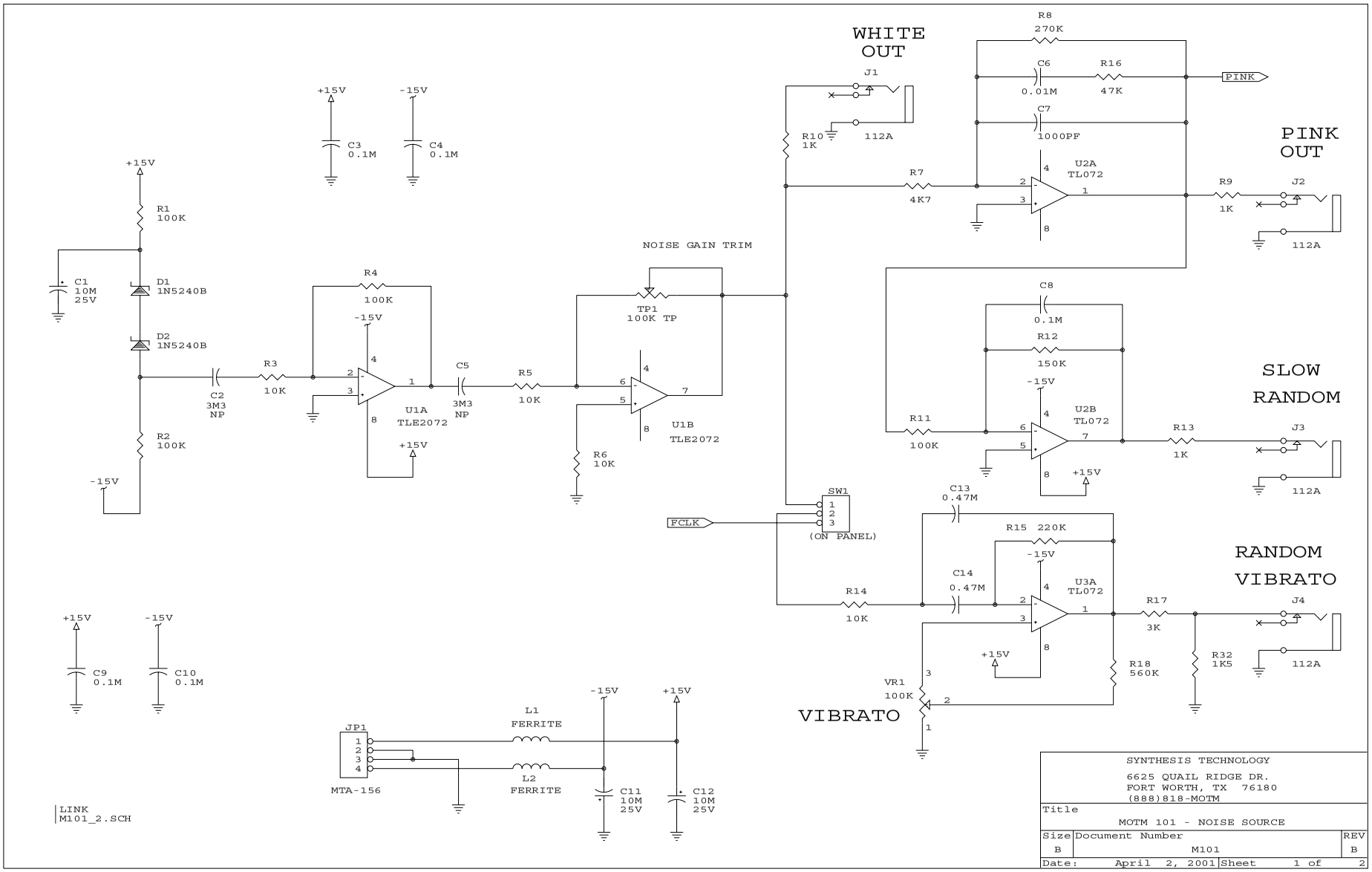

SYNTHESIS TECHNOLOGY 6625 QUAIL RIDGE DR. FORT WORTH, TX 76180 (888)818-MOTM	
Title	MOTM 101 - NOISE SOURCE
Size B	Document Number M101 REV B
Date: April 2, 2001	Sheet 1 of 2

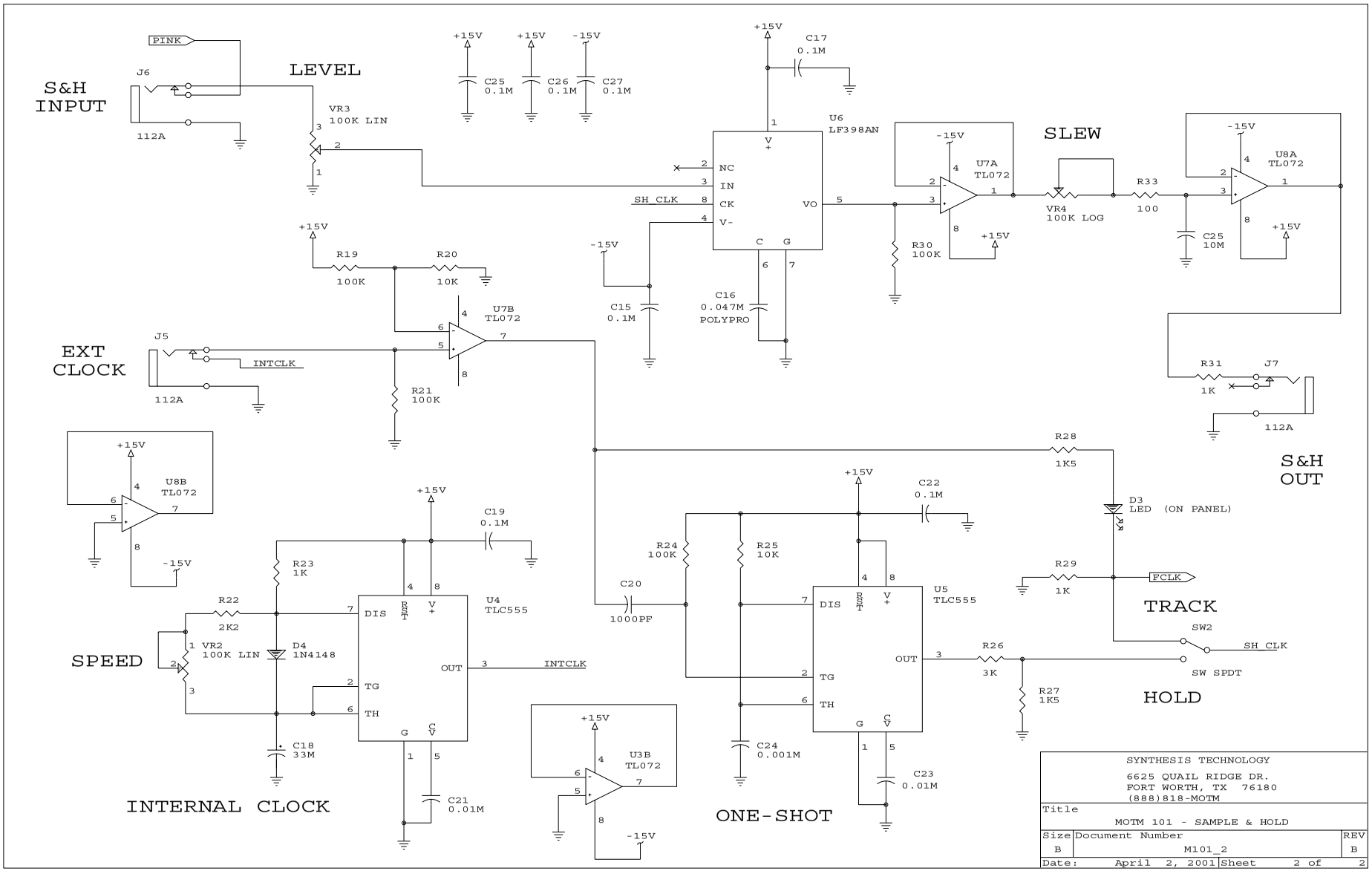
S&H INPUT
PINK
J6
112A
LEVEL
VR3 100K LIN
+15V
C25 0.1M
+15V
C26 0.1M
-15V
C27 0.1M
+15V
C17 0.1M
U6 LF398AN
NC
IN
CK
V-
V+
VO
C
G
SH_CLK
SLEW
U7A TL072
VR4 100K LOG
R33 100
U8A TL072
C25 10M
R30 100K
C15 0.1M
C16 0.047M POLYPRO
R19 100K
R20 10K
U7B TL072
EXT CLOCK
J5
INTCLK
R21 100K
R31 1K
J7
S&H OUT
R28 1K5
U8B TL072
C19 0.1M
C22 0.1M
D3 LED (ON PANEL)
R24 100K
R25 10K
C20 1000PF
R29 1K
FCLK
TRACK
SW2
SH_CLK
SW SPDT
R23 1K
R22 2K2
SPEED
VR2 100K LIN
D4 1N4148
U4 TLC555
DIS
RST
OUT
TG
TH
U5 TLC555
R26 3K
R27 1K5
HOLD
C18 33M
C21 0.01M
INTERNAL CLOCK
U3B TL072
C24 0.001M
C23 0.01M
ONE-SHOT
SYNTHESIS TECHNOLOGY
6625 QUAIL RIDGE DR.
FORT WORTH, TX 76180
(888)818-MOTM
Title
MOTM 101 - SAMPLE & HOLD
Size B
Document Number M101_2
REV B
Date: April 2, 2001
Sheet 2 of 2

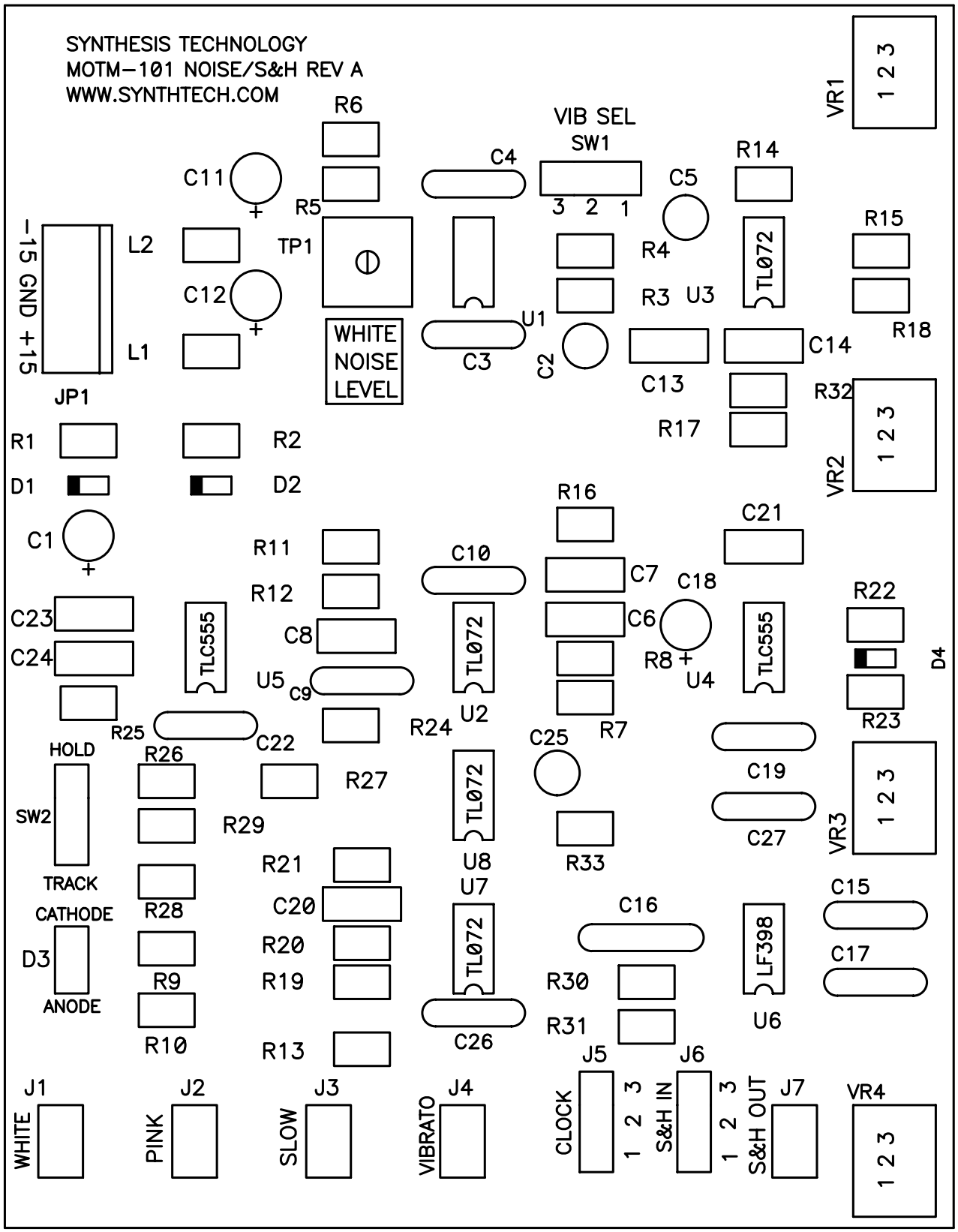
SYNTHESIS TECHNOLOGY
MOTM-101 NOISE/S&H REV A
WWW.SYNTHTECH.COM
VIB SEL
SW1
3 2 1
WHITE
NOISE
LEVEL
-15 GND +15
JP1
L1
L2
TP1
R1
R2
R3
R4
R5
R6
R7
R8
R9
R10
R11
R12
R13
R14
R15
R16
R17
R18
R19
R20
R21
R22
R23
R24
R25
R26
R27
R28
R29
R30
R31
R32
R33
C1
C2
C3
C4
C5
C6
C7
C8
C9
C10
C11
C12
C13
C14
C15
C16
C17
C18
C19
C20
C21
C22
C23
C24
C25
C26
C27
D1
D2
D3
D4
U1
U2
U3
U4
U5
U6
U7
U8
TL072
TLC555
LF398
VR1
VR2
VR3
VR4
1 2 3
HOLD
SW2
TRACK
CATHODE
ANODE
J1
J2
J3
J4
J5
J6
J7
WHITE
PINK
SLOW
VIBRATO
CLOCK
S&H IN
S&H OUT